1. ------IND- 2016 0376 D-- EN- ------ 20160826 --- --- PROJET

Specimen Administrative Provision
Technical Building Regulations (MVV TB)*

A Technical building regulations to be observed to meet the basic requirements for construction works

A 1 Mechanical resistance and stability

A 2 Fire Protection

A 3 Hygiene, health and preservation of the environment

A 4 Safety and accessibility in use

A 5 Sound insulation

A 6 Thermal insulation

B Technical building regulations to be observed for components and special constructions in addition to the technical building regulations listed in Section A

B 1 General

B 2 Technical regulations for special constructions and components pursuant to § 85a(2) MBO[1]

B 3 Technical building equipment and parts of systems for the storage, filling and handling of water-polluting substances that do not have the CE mark under the Construction Products Regulation

B 4 Construction products and designs subject to the requirements of other legal provisions for which legislation has been enacted under § 85(4a) MBO[1]

C Technical Building Regulations for construction products that do not hear the CE mark

C 1 General

C 2 Requirements for submission of the compliance declaration for a construction product under § 22 MBO

C 3 Construction products that require only a general building inspectorate test certificate under § 19(1) sentence 2 MBO1

C 4 Designs that require only a general building inspectorate test certificate under § 16a(3) MBO1

D Construction products that do not require evidence of usability

D 1 General

D 2 List pursuant to § 85a(4) MBO[1]

D 3 Technical documentation pursuant to § 85a(2)(6) MBO[1]

Annex

* Notified in accordance with Directive (EU) 2015/1535 of the European Parliament and of the Council of 9 September 2015 laying down a procedure for the provision of information in the field of technical regulations and of rules on Information Society services (OJ L 241 of 17 September 2015, p. 1).

[6] § 85a(1)(3) MBO [Model Building Regulation] does not apply to provisions in this Technical Building Regulation insofar as it relates to classifications associated with building inspectorate requirements; this also applies to sections of the application and execution conditions to be met as minimum conditions for classification

Draft

A Technical building regulations to be observed to meet the basic requirements for construction works

A 1 Mechanical resistance and stability

A 1.1 General

Under § 3 and § 12(1) MBO[1] each physical structure must be stable as a whole, in its individual parts and on its own. The stability of other structural works and the bearing capacity of the subsoil of adjacent plots may not be jeopardised. Furthermore, any effects arising during erection and use must not cause damage any parts of the structure or facilities and equipment due to large-scale deformations of the load-bearing construction.

To meet these requirements for building works, the technical rules under Section A 1.2 must be observed.

A 1.2 Technical requirements in respect of the planning, design and execution of building works and parts thereof pursuant to § 85a(2) MBO[1]

The following are excluded from compliance with the technical rules under Section 1.2:

(1) Cladding elements for interior walls

(2) Cladding elements for external walls and elements for roof cladding that are attached in accordance with accepted technical standards and meet the following criteria:

- small-format roofing panels with an area of ≥ 0.4 m² and a dead weight of ≥ 5 kg
- broad-format wall cladding elements with a width of ≥ 0.3 m and substructure support spacing of ≥ 0.8 m, or
- roofing elements with a substructure support spacing of ≥ 1.0 m (excluding those made of glass), or
- wall cladding elements whose use is regulated by roofing industry regulations.

(3) Roofing and fitting elements that are attached in accordance with accepted technical standards and have the following features:

- Roof tiles and shingles: area ≥ 0.4 m² and dead load ≥ 7 kg,
- Shaped clinkers and shaped bricks: area ≥ 0.4 m² and dead load ≥ 13 kg.

(4) Continuous roof lights with the following features:

- Level roof lights with roofing elements with a substructure support spacing ≥ 1.0 m, or
- upward curving roof lights with roofing elements with a substructure support spacing in the main load-bearing direction (in the direction of the curve for single-axis curved roofing elements) ≥ 2.0 m.

(5) Prefabricated plastic dome lights with a substructure support spacing in the main load-bearing direction ≥ 2.0 m.

Draft

[1] Under state laws

Identification/item No.	Planning, design and execution requirements pursuant to § 85a(2) MBO[1]	Technical rules/edition	Further measures pursuant to § 85a(2) MBO[1]
1	2	3	4
A 1.2.1 Bases of structural design and Actions on Structures § 85a(1) sentence 3 MBO[1] does not apply to Technical Building Regulations under Section A 1.2.1.			
A 1.2.1.1	Bases of structural design	DIN EN 1990:2010-12 Eurocode - Bases of structural design DIN EN 1990/NA:2010-12 National Annex – Nationally Determined Parameters – Eurocode: Bases of structural design	Appendix A 1.2.1/1
A 1.2.1.2	Actions on structures	DIN EN 1991 Eurocode 1: Actions on structures	
	Densities, self-weight, imposed loads for buildings	-1-1:2010-12 - General actions - Densities, self-weight, imposed loads for buildings -1-1/NA:2010-12 National Annex – Nationally Determined Parameters – Eurocode 1: Actions on supporting structures; Part 1-1: General actions - Densities, self-weight, imposed loads for buildings /A1:2015-05; Amendment A1	Appendix A 1.2.1/2
	Actions on structures exposed to fire	-1-2:2010-12 - General actions - Densities, self-weight, imposed loads for buildings Corrigendum 1:2013-08 -1-2/NA:2015-09, National Annex - Nationally determined parameters - Eurocode 1: Actions on supporting structures; Part 1-2: General actions - Actions on structures exposed to fire	Appendix A 1.2.1/3
	Snow loads	-1-3:2010-12 - General actions - Snow loads -1-3/NA:2010-12, National Annex - Nationally determined parameters - Eurocode 1: Actions on supporting structures; Part 1-3: General actions - Snow loads	Appendix A 1.2.1/4
	Wind loads	-1-4:2010-12 - General actions - Wind loads Corrigendum 1:2013-08 -1/NA:2010-12, National Annex - Nationally determined parameters - Eurocode 1: Actions on supporting structures; Part 1-4: General actions - Wind loads	Appendix A 1.2.1/5
	Exceptional impacts	-1-7:2010-12 - General actions - Exceptional impacts -1-7/NA:2010-12, National Annex -	Appendix A 1.2.1/6

Draft

[1] Under state laws

Identification/item No.	Planning, design and execution requirements pursuant to § 85a(2) MBO[1]	Technical rules/edition	Further measures pursuant to § 85a(2) MBO[1]
1	2	3	4
		Nationally determined parameters - Eurocode 1: Actions on supporting structures; Part 1-7: General actions - Exceptional impacts	
	Actions induced by cranes and machinery	-3:2010-12 - Actions induced by cranes and machinery Corrigendum 1:2013-08 -3/NA:2010-12, National Annex - Nationally determined parameters - Eurocode 1: Actions on supporting structures; Part 3: Actions induced by cranes and machinery	
	Actions on silos and tanks containing liquids	-4:2010-12 - Actions on silos and tanks containing liquids Corrigendum 1: 2013-08 -4/NA:2010-12, National Annex - Nationally determined parameters - Eurocode 1: Actions on supporting structures; Part 4: Actions on silos and tanks containing liquids DIN Expert Report 140, January 2005 edition - Designing silos to withstand dust explosions	Appendix A 1.2.1/7
A 1.2.1.3	Components that protect against falls	ETB Guideline "Components that protect against falls" (June 1985 edition)	Appendix A 1.2.1/8
A 1.2.2 Physical structures in earthworks and foundations			
A 1.2.2.1	Geotechnical design	DIN EN 1997 Eurocode 7: Geotechnical design -1:2009-09 - General rules -1/NA:2010-12, National Annex - Nationally determined parameters - Eurocode 7: Geotechnical design - Part 1: General rules	Appendix A 1.2.2/1
	Subsoil - Verification of the safety of earthworks and foundations	DIN 1054:2010-12 Subsoil - Verification of the safety of earthworks and foundations – Supplementary rules to DIN EN 1997-1 /A1:2012-08; Amendment A1 /A2:2015-11; Amendment A2	
A 1.2.2.2	Execution of bored piles	DIN EN 1536:2010-12 - Execution of special geotechnical works - Bored piles DIN SPEC 18140:2012-02 -	

[1] Under state laws

Draft

Identification/item No.	Planning, design and execution requirements pursuant to § 85a(2) MBO[1]	Technical rules/edition	Further measures pursuant to § 85a(2) MBO[1]
1	2	3	4
		Supplementary requirements for DIN EN 1536:2010-12, execution of special geotechnical works (underground engineering) – Bored piles	
A 1.2.2.3	Execution of displacement piles	DIN EN 12699:2001-05 - Execution of special geotechnical works - Displacement piles Corrigendum 1:2010-11 DIN SPEC 18538:2012-02 - Supplementary requirements for DIN EN 12699:2001-05, execution of special geotechnical works (underground engineering) – Displacement piles	Appendix A 1.2.2/2
A 1.2.2.4	Excavations, foundations and underpinning around existing buildings	DIN 4123:2013-04	
A 1.2.2.5	Execution of ground anchors	DIN EN 1537:2001-01 - Execution of special geotechnical works - Ground anchors Corrigendum 1:2011-12 DIN SPEC 18537:2012-02 - Supplementary requirements for DIN EN 1537:2001-01, execution of special geotechnical works (underground engineering) – Ground anchors	Appendix A 1.2.2/3
A 1.2.2.6	Execution of special geotechnical works - Micropiles	DIN EN 14199:2012-01 - Execution of special geotechnical works - Micropiles DIN SPEC 18539:2012-02 - Supplementary requirements for DIN EN 14199:2012-01, execution of special geotechnical works (underground engineering) – Micropiles	
A 1.2.2.7	Execution of special geotechnical works (underground engineering) – Injections Design of strengthened soil – produced with jet stream, deep-	DIN EN 12715:2000-10 - Execution of special geotechnical works (underground engineering) - Injections DIN SPEC 18187:2015-08 - Supplementary requirements for DIN EN 12715:2000-10, execution of special geotechnical works (underground engineering) – Injections DIN 4093:2015-11 - Design of strengthened soil – produced with	

[1] Under state laws

Draft

Identification/item No.	Planning, design and execution requirements pursuant to § 85a(2) MBO[1]	Technical rules/edition	Further measures pursuant to § 85a(2) MBO[1]
1	2	3	4
	mixing or injection procedures	jet stream, deep-mixing or injection procedures	
A 1.2.3 Physical structures in concrete and reinforced concrete construction			
A 1.2.3.1	Design of concrete structures	DIN EN 1992 Eurocode 2: Design of concrete structures	
	General design rules and rules for buildings	-1-1:2011-01 - General design rules and rules for buildings -1-1/A1:2015-03; Amendment A1 -1/NA:2013-04, National Annex - Nationally determined parameters - Eurocode 2: Design of concrete structures - Part 1-1: General design rules and rules for buildings -1-1/NA/A1:2015-12; Amendment A1	Annexes A 1.2.3/1 and A 1.2.3/2
	Structural fire design	-1-2:2010-12 - General rules – Structural fire design -1-2/NA:2010-12, National Annex - Nationally determined parameters - Eurocode 2: Design of concrete structures - Part 1-2: General rules – Structural fire design -1-2/NA/A1:2015-09; Amendment A1	Appendix A 1.2.3/3
	Concrete, reinforced concrete and pre-stressed concrete	DIN 1045- 2:2008-08 - Concrete; specification, properties, production and conformity – Application rules for DIN EN 206-1 DIN EN 206-1:2001-07 - Concrete - Part 1: Specification, performance, production and conformity -1/A1:2004-10; Amendment A1 -1/A2:2005-9; Amendment A2	Appendix A 1.2.3/4
		- 9:2010-09– Part 9: Supplementary rules for self-compacting concrete (SCC)	
	Execution of concrete structures	DIN 1045 - 3:2012-03 - Construction - Application rules for DIN EN 13670 Corrigendum 1: 2013-07 DIN EN 13670:2011-03 - Execution of concrete structures	Appendix A 1.2.3/4
	Pre-cast products	DIN 1045 - 4:2012-02 - Additional rules for the production and the conformity of prefabricated elements	
	Brick ceilings	DIN 1045 - 100:2011-12 - Brick ceilings	

[1] Under state laws

Draft

Identification/item No.	Planning, design and execution requirements pursuant to § 85a(2) MBO[1]	Technical rules/edition	Further measures pursuant to § 85a(2) MBO[1]
1	2	3	4
A 1.2.3.2	Protection and repair of concrete structural components	DAfStb [German Committee for steel fibre reinforced concrete] guideline on the protection and repair of concrete structural components: 2001-10 Part 1: General regulations and planning principles Part 2: Construction products and application, including Corrigendum 2 2005-12 Part 3: Requirements for firms and monitoring execution and Corrigendum 3, 2014-09	
A 1.2.3.3	Shotcrete	DIN EN 14487 - Shotcrete -1:2006-03 - Definitions, specifications and conformity	
		-2:2007-01 - Execution	
		DIN 18551:2014-08, Shotcrete - National rules for series DIN EN 14487 and rules for design of shotcrete constructions	
A 1.2.3.4	Welding concrete steel	DIN EN ISO 17660 - Welding - Welding concrete steel	Appendix A 1.2.3/5
		- 1:2006-12 - Load-bearing welding connections - Corrigendum 1:2007-08	
		- 2:2006-12 - Non-load-bearing welding connections - Corrigendum 1:2007-08	
A 1.2.3.5	Application of prefabricated reinforced components of autoclaved aerated concrete	DIN 4223 - Application of prefabricated reinforced components of autoclaved aerated concrete	Appendix A 1.2.3/1, Sections 1, 2.2, 2.3, 4
		-101:2014-12 - Design and dimensioning	
		102:2014-12 – Application in structures	
		-103:2014-12 - Safety concept	
A 1.2.3.6	Application of prefabricated building components made of lightweight aggregate concrete with open structure with static eligible reinforcement or non-static eligible reinforcement in structures	DIN 4213: 2015-10 - Application of prefabricated building components made of lightweight aggregate concrete with open structure with static eligible reinforcement or non-static eligible reinforcement in structures	Appendix A 1.2.3/1, Sections 1, 2.2, 2.3, 4
A 1.2.3.7	Subsequent rebar connections with bonded-in reinforced steel	Technical rules – Subsequent rebar connections: 2016-06 (Annex)	

[1] Under state laws

Draft

Identification/item No.	Planning, design and execution requirements pursuant to § 85a(2) MBO[1]	Technical rules/edition	Further measures pursuant to § 85a(2) MBO[1]
1	2	3	4
A 1.2.3.8	Anchors in concrete with encased or subsequently fitted fastenings	Technical rules – Anchors in concrete: 2016-06 (Annex)	
A 1.2.4 Physical structures in metal and composite construction			
A 1.2.4.1	Design of steel structures	DIN EN 1993: Eurocode 3: Design of steel structures	
		- 1-1: 2010-12 - General design rules and rules for buildings 1-1/A1:2014-07; Amendment A1 -1/NA:2015-08, National Annex - Nationally determined parameters - Eurocode 3: Design of steel structures – Part 1-1: General design rules and rules for buildings	Annexes A 1.2.4/1 and A 1.2.3/2
	Structural fire design	- 1-2:2010-12 - General rules – Structural fire design -1-2/NA:2010-12, National Annex - Nationally determined parameters - Eurocode 3: Design of steel structures - Part 1-2: General rules – Structural fire design	Appendix 1.2.3/3
	Supplementary rules for cold-formed components and sheeting	-1-3: 2010-12 - General rules – Supplementary rules for cold-formed components and sheeting -1-3/NA: 2010-12, National Annex - Nationally determined parameters - Eurocode 3: Design of steel structures – Part 1-3: General rules – Supplementary rules for cold-formed, thin-walled components and sheeting	Appendix A 1.2.4/2
	Supplementary rules for stainless steels	-1-4:2015-10 - General design rules – Supplementary rules for applying stainless steels -1-4/NA:2016-xx, National Annex - Nationally determined parameters - Eurocode 3: Design of steel structures – Part 1-4: General rules – Supplementary rules for stainless steels	
	Plated structural elements	- 1-5:2010-12 - Plated structural elements -1-5/NA:2010-12, National Annex - Nationally determined parameters - Eurocode 3: Design of steel structures – Part 1-5: Plated structural	

[1] Under state laws

Draft

Identification/item No.	Planning, design and execution requirements pursuant to § 85a(2) MBO[1]	Technical rules/edition	Further measures pursuant to § 85a(2) MBO[1]
1	2	3	4
		elements	
	Strength and stability of shell structures	- 1-6: 2010-12 - Strength and stability of shell structures -1-6/NA: 2010-12, National Annex - Nationally determined parameters - Eurocode 3: Design of steel structures – Part 1-6: Strength and stability of shell structures	
	Plated structural elements with transverse loading	- 1-7: 2010-12 - Plated structural elements with transverse loading -1-7/NA: 2010-12, National Annex - Nationally determined parameters - Eurocode 3: Design of steel structures – Part 1-7: Plated structural elements with transverse loading	
	Design of joints	-1-8: 2010-12 - Design of joints -1-8/NA: 2010-12, National Annex - Nationally determined parameters - Eurocode 3: Design of steel structures – Part 1-8: Design of joints	
	Fatigue	-1-9: 2010-12 - Fatigue -1-9/NA: 2010-12, National Annex - Nationally determined parameters - Eurocode 3: Design of steel structures – Part 1-9: Fatigue	
	Material toughness and through-thickness properties	-1-10: 2010-12 - Material toughness and through-thickness properties -1-10/NA:2010-12, National Annex - Nationally determined parameters - Eurocode 3: Design of steel structures – Part 1-10: Material toughness and through-thickness properties	
	Design of composite steel structures	- 1-11: 2010-12 - Design of composite steel structures -1-11/NA: 2010-12, National Annex - Nationally determined parameters - Eurocode 3: Design of steel structures – Part 1-11: Design of composite steel structures	Appendix A 1.2.4/3
	Additional rules extending EN 1993 to steel grades up to S700	- 1-12: 2010-12 - Additional rules extending EN 1993 to steel grades up to S700 -1-12/NA: 2011-08, National Annex - Nationally determined parameters - Eurocode 3: Design of steel structures - Part 1-12: Additional rules extending	

[1] Under state laws

Draft

Identification/item No.	Planning, design and execution requirements pursuant to § 85a(2) MBO[1]	Technical rules/edition	Further measures pursuant to § 85a(2) MBO[1]
1	2	3	4
		EN 1993 to steel grades up to S700	
	Towers and masts	-3-1:2010-12 - Towers, masts and chimneys – Towers and masts -3-1/NA:2015-11, National Annex - Nationally determined parameters - Eurocode 3: Design of steel structures – Part 3-1: Towers, masts and chimneys – Towers and masts	
	Chimneys	-3-2:2010-12 - Towers, masts and chimneys – Chimneys -3-2/NA:2010-12, National Annex - Nationally determined parameters - Eurocode 3: Design of steel structures – Part 3-2: Towers, masts and chimneys – Chimneys	Appendix A 1.2.4/4
	Silos	- 4-1:2010-12 - Part 4-1: Silos - 4-1/NA:2010-12, National Annex - Nationally determined parameters - Eurocode 3: Design of steel structures – Part 4-1: Silos, tank structures and pipes – Silos	
	Piles and sheet pile walls	-5:2010-12 - Piles and sheet pile walls -5/NA:2010-12, National Annex - Nationally determined parameters - Eurocode 3: Design of steel structures – Part 5: Piles and sheet pile walls	
	Crane runways	- 6: 2010-12 - crane runways -6/NA: 2010-12, National Annex - Nationally determined parameters - Eurocode 3: Design of steel structures – Part 6: Crane runways	
	Execution of steel structures	DIN EN 1090-2:2011-10 - Execution of steel structures and aluminium structures - Part 2: Technical requirements for steel structures	Appendix A 1.2.4/5
A 1.2.4.2	Design of composite steel and concrete structures	DIN EN 1994: Eurocode 4: Design of composite steel and concrete structures	
	General design rules and application rules for buildings	- 1-1: 2010-12 - General design rules and application rules for buildings -1-1/NA: 2010-12, National Annex - Nationally determined parameters - Eurocode 4: Design	Annexes A 1.2.3/2 and A 1.2.4/1

[1] Under state laws

Draft

Identification/item No.	Planning, design and execution requirements pursuant to § 85a(2) MBO[1]	Technical rules/edition	Further measures pursuant to § 85a(2) MBO[1]
1	2	3	4
		of composite steel and concrete structures – Part 1-1: General design rules and application rules for buildings	
	Structural fire design	- 1-2: 2010-12 - General rules – Structural fire design -1-2/A1:2014-06 - Amendment A 1 -1-2/NA: 2010-12, National Annex - Nationally determined parameters - Eurocode 4: Design and construction of steel structures; composite structures of steel and concrete – Part 1-2: General rules – Structural fire design	Appendix A 1.2.3/3
A 1.2.4.3	Design of aluminium structures	DIN EN 1999 Eurocode 9: Design of aluminium structures	
	General design rules	- 1-1: 2014-03 - General design rules -1-1/NA:2013-05, National Annex - Nationally determined parameters - Eurocode 9: Design and construction of aluminium structures - Part 1-1: General design rules -1-1/NA/A1:2014-06; Amendment A1 -1-1/NA/A2:2015-03; Amendment A2 -1-1/NA/A3:2015-11; Amendment A3	Appendix A 1.2.4/1
	Structural fire design	-1-2:2010-12 - Structural fire design -1-2/NA:2011-04, National Annex - Nationally determined parameters - Eurocode 9: Design and construction of aluminium structures - Part 1-2: Structural fire design	Appendix A 1.2.3/3
	Load-bearing structures subject to fatigue	-1-3:2011-11 – Load-bearing structures subject to fatigue -1-3/NA:2013-01, National Annex - Nationally determined parameters - Eurocode 9: Design and construction of aluminium structures - Part 1-3: Load-bearing structures subject to fatigue	
	Cold-formed profile panels	-1-4:2010-05 - Cold-formed profile panels -1-4/A1:2011-11; Amendment A1 -1-4/NA:2010-12, National Annex - Nationally determined	Appendix A 1.2.4/2

[1] Under state laws

Draft

Identification/item No.	Planning, design and execution requirements pursuant to § 85a(2) MBO[1]	Technical rules/edition	Further measures pursuant to § 85a(2) MBO[1]
1	2	3	4
		parameters - Eurocode 9: Design and construction of aluminium structures - Part 1-4: Cold-formed profile panels	
	Shell structures	-1-5:2010-12 - Shell structures -1-5/NA:2010-12, National Annex - Nationally determined parameters - Eurocode 9: Design and construction of aluminium structures - Part 1-5: Shell structures	
	Execution of aluminium structures	DIN EN 1090-3:2008-09 Execution of steel structures and aluminium structures – Part 3: Technical requirements for aluminium structures	Appendix A 1.2.4/6
A 1.2.4.4	Above-ground cylindrical flat-bottom tank structures of metallic materials	DIN 4119 - Above-ground cylindrical flat-bottom tank structures of metallic materials	Appendix A 1.2.4/7
		- 1:1979-06 - Basic principles, execution, testing	
		- 2:1980-02 - Calculation	
A 1.2.5 Physical structures in timber construction			
A 1.2.5.1	Design of timber structures	DIN EN 1995: Eurocode 5: Design of timber structures	
		-1-1:2010-12 - Part 1-1: General – Common rules and rules for building /A2:2014-07; Amendment A2 -1-1/NA:2013-08, National Annex - Nationally determined parameters - Eurocode 5: Design and construction of timber structures - Part 1-1: General – Common rules and rules for building	Appendix A 1.2.5/1
	Structural fire design	-1-2:2010-12 - Part 1-2: General rules – Structural fire design -1-2/NA:2010-12, National Annex - Nationally determined parameters - Eurocode 5: Design and construction of timber structures - Part 1-2: General rules – Structural fire design	Appendix A 1.2.3/3
	Bridges	-2:2010-12 - Part 2: Bridges -2/NA:2011-08, National Annex - Nationally determined parameters - Eurocode 5: Design and construction of timber structures - Part 2: Bridges	Appendix A 1.2.5/1

[1] Under state laws

Draft

Identification/item No.	Planning, design and execution requirements pursuant to § 85a(2) MBO[1]	Technical rules/edition	Further measures pursuant to § 85a(2) MBO[1]
1	2	3	4
	Manufacture and execution of timber structures	DIN EN 1052-10:2012-05 – Design of timber structures Part 10: Supplementary Provisions	
A 1.2.5.2	Wood preservation	DIN EN 68800-1:2011-10 - Wood preservation - Part 1: General remarks	Annex A.1.2.5/2
		-2:2012-02 - Part 2: Preventive constructional measures	
A 1.2.6 Physical structures in masonry			
A 1.2.6.1	Design of masonry structures	DIN EN 1996: Eurocode 6: Design of masonry structures	
	General rules for reinforced and unreinforced masonry structures	-1-1:2013-02- General rules for reinforced and unreinforced masonry structures -1-1/NA:2012-05, National Annex - Nationally determined parameters - Eurocode 6: Design of masonry structures Part 1-1: General rules for reinforced and unreinforced masonry structures -1-1/NA/A1:2014-03; Amendment A1 -1-1/NA/A2:2015-01; Amendment A2	Appendix A 1.2.6/1
	Structural fire design	-1-2:2011-04 - General rules – Structural fire design -1-2/NA:2013-06, National Annex - Nationally determined parameters - Eurocode 6: Design of masonry structures Part 1-2: General rules – Structural fire design	Appendix A 1.2.6/2
	Design considerations, selection of materials and execution of masonry	- 2:2010-12 - Design considerations, selection of materials and execution of masonry -2/NA:2012-01, National Annex - Nationally determined parameters - Eurocode 6: Design and construction of masonry structures - Part 2: Design considerations, selection of materials and execution of masonry	
	Simplified calculation methods for unreinforced masonry structures	- 3:2010-12 - Simplified calculation methods for unreinforced masonry structures -3/NA:2012-01, National Annex - Nationally determined parameters - Eurocode 6: Design	

Draft

[1] Under state laws

Identification/item No.	Planning, design and execution requirements pursuant to § 85a(2) MBO[1]	Technical rules/edition	Further measures pursuant to § 85a(2) MBO[1]
1	2	3	4
		and construction of masonry structures - Part 3: Simplified calculation methods for unreinforced masonry structures -3/NA/A1:2014-03; Amendment A1 -3/NA/A2:2015-01; Amendment A2	
A 1.2.6.2	Prefabricated masonry compound units	DIN EN 1053-4:2013-04 - Masonry - Part 4: Prefabricated masonry compound units	Appendix A 1.2.6/3
A 1.2.6.3	Anchors in masonry with subsequently fitted fastenings	TR ─ Anchors in masonry: 2016-06 (Annex)	
A 1.2.7 Glass constructions			
A 1.2.7.1	Glass in building - Design and construction rules	DIN 18008 - Glass in building - Design and construction rules	Appendix A 1.2.7/1
		-1:2010-12 - Part 1: Definitions and general principles	Appendix A 1.2.7/2
	Linear glazings	-2:2010-12 - Part 2: Linear glazings	Appendix A 1.2.7/3
	Glazing with punctiform supports	-3:2013-07 - Part 3: Glazing with punctiform supports	
	Additional requirements for safety barrier glazing	-4:2013-07 - Part 4: Additional requirements for safety barrier glazing	
	Additional requirements for glazing designed to sustain human loads	-5:2013-07 - Part 5: Additional requirements for glazing designed to sustain human loads	
A 1.2.8 Special constructions			
A 1.2.8.1	Free-standing chimneys	DIN 1056:2009-06 - Solid construction, free-standing chimneys - Brick liners - Calculation and design	Annexes A 1.2.4/4 and A 1.2.8/1
		DIN EN 13084-1:2007-05 - Free-standing chimneys - Part 1: General requirements	Appendix A 1.2.8/1
		DIN EN 13084-2:2007-08 - Free-standing chimneys - Part 2: Concrete chimneys	
		DIN EN 13084-4:2005-12 - Free-standing chimneys - Part 4: Brick liners - Design and execution	
		DIN EN 13084-6:2005-03 - Free-standing chimneys - Part 6: Steel liners - Design and execution	Appendix A 1.2.8/2

[1] Under state laws

Draft

Identification/item No.	Planning, design and execution requirements pursuant to § 85a(2) MBO[1]	Technical rules/edition	Further measures pursuant to § 85a(2) MBO[1]
1	2	3	4
		DIN EN 13084-8:2005-08 - Free-standing chimneys - Part 8: Design and execution of mast construction with satellite components	Appendix A 1.2.8/2
A 1.2.8.2	Bell towers	DIN 4178:2005-04 - Bell towers	
A 1.2.8.3	Greenhouses	DIN EN 11535-1:1998-02 - Greenhouses - Part 1: Execution and calculation	Appendix A 1.2.7/2
A 1.2.8.4	Falsework	DIN EN 12812:2008-12 Falsework - Performance requirements and general design	Annexes A 1.2.8/3 and A 1.2.8/4
A 1.2.8.5	Working scaffolding	DIN EN 12811-1:2004-03 - Temporary constructions for structures - Part 1: Working scaffolding – Performance requirements, design, construction and dimensioning	Annexes A 1.2.8/4 and A 1.2.8/5
	Protective scaffolding	DIN EN 4420-1:2004-03 - Working and protective scaffolding - Part 1: Protective scaffolding – Performance requirements, design, construction and dimensioning	Appendix A 1.2.8/5
A 1.2.8.6	Silage silos and slurry tanks	DIN 11622 - Silage silos and slurry tanks	
		- 1:2006-01 - Part 1: Design, execution, condition, general requirements	
		- 2:2004-06 - Part 2: Design, execution, condition; silage silos and slurry tanks of reinforced concrete, pre-cast reinforced concrete, pre-cast concrete and concrete formwork blocks	
		- 4:1994-07 - Part 4: Design, execution, condition; steel silage silos and slurry tanks	
A 1.2.8.7	Wind turbines; Effect and proof of stability for tower and foundation	Guidelines for wind turbines; effect and structural safety test for tower and foundation, October 2012 version, corrected version, March 2015	Appendix A 1.2.8/6
A 1.2.8.8	Loam constructions for residential buildings in building class 1 and 2 with no more than two full storeys	Loam construction rules, February 2008	

Draft

[1] Under state laws

Identification/item No.	Planning, design and execution requirements pursuant to § 85a(2) MBO[1]	Technical rules/edition	Further measures pursuant to § 85a(2) MBO[1]
1	2	3	4
A 1.2.8.9	Stationary cylindrical single-wall and double-wall steel containers (tanks) for the surface storage of liquids fuels hazardous to water for the energy supply of heating and cooling systems for buildings		Appendix A 1.2.8/7
	Stationary thermoplastic tanks for the surface storage of liquids fuels for the energy supply of heating and cooling systems for buildings		Appendix A 1.2.8/8
A 1.2.9 Physical structures in seismic zones			
A 1.2.9.1	Structures in German seismic zones	DIN 4149:2005-04 - Structures in German seismic zones – Design loads, measurement and design customary in construction	Appendix A 1.2.9/1

Draft

[1] Under state laws

Appendix A 1.2.1/1

to DIN EN 1990 in conjunction with DIN EN 1990/NA

The informative Annexes B, C and D do not apply.

Appendix A 1.2.1/2

to DIN EN 1991-1-1 in conjunction with DIN EN 1991-1-1/NA

Re Section 6.4:
The following applies to horizontal loads for heliports on roofs:

1 On take-off and landing surfaces and surrounding safety strips, assume a horizontal payload of q_k= 1.0 kN/m on the most unfavourable location on a component cross section under investigation.
2 Assume a horizontal load of 10 kN for rollover protection at least 10 cm high.

Appendix A 1.2.1/3

to DIN EN 1991-1-2 in conjunction with DIN EN 1991-1-2/NA

Where natural fire models are used, the following must be observed:

1 The result of the fire resistance measurement (effects of fire and certificate) for load-bearing or reinforcing building components on the basis of natural fire models (Section 3.3 DIN EN 1991-1-2:2010-12) requires a derogation from § 67(1) MBO[1]; it may also be approved under § 51 MBO[1].

Note:
Fire resistance for building components is assessed in the building inspection processes on the basis of fire tests using the standard temperature-time curve and results in fire resistance classification (DIN 4102-2:1977-09, DIN EN 13501-2) attached to the building inspection requirements.
Building component measurements based on natural fire models take into account the actual use and characteristics of a room or building taking into consideration the existing fire protection infrastructure.
Such measurements do not fully cover the overall building inspection requirement system for fire resistance classification (building category, floor height, building type).
For this reason, the applicability of natural fire models is to be decided on in the framework of a derogation from § 67 or a relaxation under § 51 MBO. In addition, the planning application or building documents must state why a standard temperature-time curve fire exposure is not required and specify which fire model was chosen for the building project (and why) and how the inevitable limited use of the facility is to be ensured (e.g. due to limited fire loads) (§ 67(1) MBO[1], § 11(2) sentence 1(1), sentence 2 MBauVorlV[1]; see no. 5).

2 To verify stability (§ 10(1) MBauVorlV[1]), the documents required to assess the effects of fire, in particular to determine thermal effects and design-relevant fire scenarios including the corresponding design fires, must also be provided (§ 1(4) MBauVorlV[1]). The required documents must be complete, comprehensible and verifiable; the thermal effects must be spatially determined and documented. The input parameters chosen must be representative and conservative and must also take account of fire effects from the outside and specific conditions of use (e.g. vehicles in exhibition spaces during the assembly and dismantling phases of trade fair stands).

The testing engineer or registered inspector[1] authorised to check/certify stability under § 66(3) MBO[1]must either also be a testing engineer or registered inspector for fire protection[1] or must consult an experienced testing engineer or registered inspector experienced in fire protection to assess the effects of fire[1]. The assessment of the effects of fire must involve verifying that all input parameters are complete and accurate; spot-checks or plausibility checks are not sufficient.

3 For fire protection certification (§ 11 MBauVorlV[1]), the building documents must also set out how building components of the load-bearing structure designed according to natural fire models are to be combined with the necessary (classified) space-enclosing components (such as fire walls and partition walls, ceilings, walls of required stairwells and floors) in an appropriate fire protection concept. Statements on the connections of different fire protection regulations of the designed components are also included.
The requirements of MBO, sample special building regulations and sample guidelines for space-enclosing components remain unaffected.

[1] Under state laws

4 The fire resistance of the load-bearing structure is essential for effective fire-fighting. Prior to the decision to deviate or relax, the relevant fire protection authority must be consulted about the precautionary fire protection regulations; § 19 M-PPVO[1] remains unaffected.

5 The permitted type of use of the building project (e.g. office buildings) will be (spatially) set out and delimited by the (selected) input parameters (laid down by the planning permission) to determine the exposure to fire. Appropriate measures must therefore be defined to ensure compliance with this restriction on use. This includes, in particular, appointing a fire protection officer to monitor operations and commissioning a test of the fire load assumption within one year after begin of use, as well as recurring tests (e.g. at intervals of 3-5 years), carried out by a testing engineer or registered inspector for fire protection[1].
Restriction on use and measures implemented to ensure compliance with this must be set out in the planning permission under auxiliary conditions. The planning permission must also specify that changes to the approved use that lead to increased exposure to fire (e.g. changed fire loads), require stability testing and, where applicable, a further planning application and approval procedure.

Note:
Buildings whose stability is designed based on natural fire models are subject to limitations on use ensured through operating measures and external inspections. Such models may thus only be properly used for specific building uses. They can be suitable in the case of uses with lower and invariable fire loads, in particular in large spatial structures. However, they are not suitable for spaces with variable fire loads and uses or buildings with special safety requirements (e.g. skyscrapers). The requirement for operating measures excludes use in residential buildings or similar uses.

6 In relation to DIN EN 1991-1-2/NA:2015-09, Annex BB (NA.BB)

6.1 Fire load density in accordance with Section NA.BB.3.2, Table BB.1, Column 3, may not be any lower, even in investigations in individual cases, under Section NA.BB.3.3; the values relate only to the typical use of space for the relevant building type and not to the use of space for the overall building (see NA.BB.3.2(3) on office buildings); this applies to Table BB.2.

6.2 The maximum heat release rate $Q_{max,k}$ in accordance with Section NA.BB.4, equation (BB.7) must also be determined for spaces with more than 400 m², to establish heat release rate $Q_{max,f,k}$ for an assumed fire load controlled fire in accordance with equation (BB.5) and to establish heat release rate $Q_{max,v,k}$ assuming ventilation-controlled fire in accordance with equation (BB.6). The value derived from equation (BB.7) (characteristic value $Q_{max,k}$) must always be on the safe side.

6.3 To assess the probability p_1 of an initial fire occurring per year and per unit, in accordance with Section NA.BB.5.1, the larger and therefore least favourable value derived from the data in accordance with Table BB.3 must be used to determine the probability p_{fi} of a destructive fire occurring in accordance with equation (BB.9).
To assess the probability of a failure of the public fire service, the value $p_{2.2} = 0.5$ in accordance with Table BB.4 should be used.

6.4 To calculate conditional failure probability $p_{f,fi}$ in accordance with Section NA.BB.5.2, in the equation (BB.13), the failure probability p_f for building components of load-bearing structures must always use at least an average value from the damage classification "medium" under Table BB.5.
For buildings used for offices or similar purposes and whose utilisation units have a gross floor area of 400 m² (see § 36(1) sentence 2(4) MBO[1]), the value 4.7 must be used for the reliability index β and the value 1.3E-6 as per Table BB.5 must be used for the related failure probability p_f.
Special constructions where the effects of failure or restriction of activity of a load-bearing structure may have severe consequences on life, health or natural resources (see DIN EN 1990:2010-12, Annex B), must be classified as "high" damage under Table BB.5.

Appendix A 1.2.1/4

to DIN EN 1991-1-3 in conjunction with DIN EN 1991-1-3/NA

1 Reference is made to the table **"**Classification of snow load zones according to administrative limits**"** in respect of the classification of snow load zones according to administrative limits or ... [1]. The table **"**Classification of snow load zones according to administrative limits**"** is available at www.is-argebau.de or www.dibt.de/de/Geschaeftsfelder/BRL-TB.html#TB.

2 Re Section 4.3 (North-German plain):
In municipalities marked with footnote ... in the table **"**Classification of snow load zones according to administrative limits**"** or ... [1], the design situation with snow as an exceptional effect must be tested for all buildings in snow load zones 1 and 2 in addition to the constant and temporary design situations. In this regard, the rated value of the snow load shall be assumed to be $s_i = 2.3\ \mu_i \cdot s_k$.

3 Section 6 Ice loads and Annex A to DIN 1055-5:2005-07 must be observed.

[1] Under state laws

Appendix A 1.2.1/5

to DIN EN 1991-1-4 in conjunction with DIN EN 1991-1-4/NA

1 Re Section NA.B.3.2, Table NA.B.3, column 2:
In the case of buildings (terraced houses) with a total height h ≥ 10.0 m which are extended on both sides in essentially the same profile, and where it is ensured (under law) that the add-ons are not removed on a permanent basis, proof of the action of the wind may be furnished in the form of the variable effect resulting from pressure or drag. In this connection, the least favourable value is decisive. The effect of pressure and drag may must then be applied jointly as an unusual action.

2 Reference is made to the table **"**Classification of wind load zones according to state administrative limits**"** in respect of the classification of wind load zones according to state administrative limits or ... [1]. The table **"**Classification of wind load zones according to administrative limits**"** is available at www.is-argebau.de or www.dibt.de/de/Geschaeftsfelder/BRL-TB.html#TB.

Appendix A 1.2.1/6

to DIN EN 1991-1-7 in conjunction with DIN EN 1991-1-7/NA

The informative annexes do not apply.

Appendix A 1.2.1/7

Re DIN EN 1991-4 in conjunction with DIN EN 1991-4/NA and DIN Expert Report 140

1 In the case of silo cells of up to a container volume of 4000 m³ and a slenderness (ratio of cell height h_c to cell diameter d_c) $h_c/d_c < 4.0$, the rules of DIN EN 14491 may be used in addition to the DIN Expert Report 140, provided the mass of the anti-pressure system does not exceed a value of 50 kg/m².

2 The following shall be noted when applying DIN Expert Report 140:
As long as there are no spherical explosion conditions present, when using the nomograms of DIN Expert Report 140 for lower silo cells with slenderness ratios of $h_c/d_c < 2.0$, the nomogram values are extrapolated using slenderness ratios of H/D=2 and H/D=4.

Appendix A 1.2.1/8

Re ETB Guideline "Components that protect against falls"

1 Re Section 3.1:1 Paragraph:
Where greater horizontal line loads occur pursuant to DIN EN 1991-1-1 in conjunction with DIN EN 1991-1-1/NA, these must be taken into account.

2 Re Section 3.1.4 Paragraph:
Instead of the sentence **"**These loads must be overlaid with wind loads.**"** the following applies:
"These loads must be overlaid with wind loads, except for balcony and pergola railings not used as escape routes.**"**

3 The ETB Guideline must not be applied to glass components.

Appendix A 1.2.2/1

1 There are no final technical design and execution rules[3] for the following construction products/construction kits with an ETA[2]:

- Gabions
- Piles made of ductile cast iron pipes
- Rock and floor nails
- Small-diameter micropiles (composite piles)
- Rock and ground anchors

[1] Under state laws

Draft

2 Re DIN 1054, Section A 11.5.4:
Earthworks must be permanently stable. When geosynthetics with reinforcement function pursuant to EN 13251 are used to build earthworks, design and assessment of creep strain and creep behaviour at constant load (long-term stress-strain behaviour) may be carried out in accordance with the "Recommendations for the design and calculation of embankments with geosynthetic (EBGEO)"[4].

3 Re ETAs for **"**Construction kit for rock and floor nails, construction kits with hollow bars for self-driving nails**"**:
Rock and floor nails may only be used on a temporary basis (**≥** 2 years).

4 Re ETAs for **"**Construction kit for small-diameter piles**"**, **"**Construction kits with hollow bars for self-driving nails**"**:
The micropiles may only be used on a temporary basis (**≥** 2 years).

---

[2] under ETAG/CUAP/EAD
[3] application of § 16a MBO[1]
[4] "Recommendations for the design and calculation of embankments with geosynthetic (EBGEO)": Deutsche Gesellschaft für Geotechnik, 2010 edition, Ernst & Sohn Verlag für Architektur and technische Wissenschaften GmbH & Co. KG

Appendix A 1.2.2/2

Re DIN EN 12699

Re DIN EN 12699, Section 6.2.1 and 7.7.4, and DIN SPEC 18538, A 6.2.1.1:
When executing piles or segment piles pursuant to EN 12794 the relevant provisions and measures under Appendix A 1.2.3/1 must be adhered to.

- The piles and segment piles must correspond to class 1 under Table 3, EN 12794.
- The load-bearing capacity of coupled piles with class A to C pile joints under Table 4, EN 12794 must correspond to that of an uncoupled pile.
- Coupled piles may only be subjected to predominantly static actions.

Appendix A 1.2.2/3

Re DIN EN 1537

The standard contains no final regulation on the design and execution of permanent anchors, particularly for specific durability aspects.[1]

Appendix A 1.2.3/1

1 Section C 2.1 of this MVV TB regulates the requirements for concrete and reinforced concrete construction products.

2 Pre-cast products
2.1 For load-bearing structures made of pre-cast products under harmonised standards, DIN V 20000-120: 2006-04 - Application of building products in structures, Part 120: Application rules for DIN EN 13369: 2004-09 **–** must be observed.
2.2 When using non-harmonised starting materials, the technical rules under Section C 2.1 apply. The starting materials used must be stated.
2.3 Where load-bearing features of building components or kits in the form of calculated load-bearing values, mechanical resistance or complete static calculations are stated in the declaration of performance, these count as structural analysis verifications.
2.4 The design and structural construction of prefabricated concrete components in physical structures must be done in accordance with A 1.2.3.1.
2.5 For individual garages under DIN EN 13978-1, DIN V 20000-125:2006-12 may also be applied in respect of planning, design and execution. In this case, the rules under A.1.2.3.1 apply instead of DIN 1045-1: 2001-07.
2.6 When using bricks under DIN EN 15037-3 in ceiling systems, DIN 20000-129:2014-10 **–** Application of building products in structures **–** Part 129: Rules for the use of ceramic intermediate parts under DIN EN 15037-3:2011-07 must also be observed.

3 For the planning, design and execution of physical structures using tensioning procedures with the exception of the pre-tensioning procedure with immediate for connection under DIN EN 1992-1-1:2011-01, Section 5.10, there is no final rule in Section A 1.2.3 and C 2.1.

---

[1] Under state laws

Draft

4 Re DIN EN 1992-1-1, Section 2.5:
The design of load-bearing structures on the basis of tests shall not apply.

[3] application of § 16a MBO[1]

Appendix A 1.2.3/2

The rules in General Circular - Road Construction No. 22/2012 from the Federal Ministry of Transport, Building and Urban Affairs (published in the Transport Gazette 2012, volume 24, p. 995) must be applied to the planning, design and construction of bridges.

Appendix A 1.2.3/3

Re DIN EN 1992-1-2, DIN EN 1993-1-2, DIN EN 1994-1-2, DIN EN 1995-1-2 and DIN EN 1999-1-2

For special developments (e.g. connections, joints, etc.), the rules of application under DIN 4102-4 must be observed, where the Eurocode does not provide any information.

Appendix A 1.2.3/4

1 The specifications of C 2.1.4.3 apply.

2 DIN EN 13791 (including the national appendix) can be used to determine the compression strength of concrete in existing buildings.

3 For the use of self-compacting concrete the DafStb guideline on self-compacting concrete (DAfStb-Richtlinie Selbstverdichtender Beton, SVB-Richtlinie) (2012-09) shall apply.

4 The DafStb guidelines on solid concrete components (DAfStb-Richtlinie Massige Bauteile aus Beton) (2010-04) apply to the use of solid concrete components.

5 In principle, the compressive strength must be determined for classification into the requested compressive strength classes in accordance with DIN EN 206-1, Section 4.3.1 and for determination of the of the characteristic strength in accordance with DIN EN 206-1, Section 5.5.1.2 on test pieces up to 28 days old. Conformity must be verified on test pieces up to 28 days old within the scope of the conformity control for compressive strength in accordance with DIN EN 206-1, Section 8.2.1. Deviation from this principle is only permitted if either
I) the DafStb Guideline "Massive Concrete Components" can be applied and is applied or
II) all of the following conditions are met:

a) There is a technical requirement for proof of compressive strength with a high test age. This is the case for example with some high-tensile concretes, for low-joint/joint-less constructions and for components with high requirements for joint limitation.
b) The use of concrete is subject at least to the rules for monitoring class 2 in accordance with DIN 1045-3, unless more stringent requirements apply for the compressive strength class. If a higher test age is required, this must be confirmed by the monitoring body within the framework of monitoring the installation of concrete in accordance with DIN 1045-3, Annex C.
c) A quality assurance plan prepared by a construction firm is available, which details for each project how the change in test age is taken into account in terms of stripping times, re-treatment times and construction schedule. This quality assurance plan must be submitted to the monitoring body for approval within the framework of monitoring in accordance with DIN 1045-3, Annex C, prior to construction.
d) The supplier directory and the delivery note must also include the compressive strength of the concrete after more than 28 days. Without prejudice to this rule, the plant remains responsible for the agreement with the buyer as required by the standard. Reference must also be made to the effects on the construction schedule, particularly in terms of re-treatment times, durability and stripping times in each individual case.

6 When using steel fibre concrete, the **"**DAfStb guideline on steel fibre concrete (2012-11)**"** shall be observed.

Appendix A 1.2.3/5

Re DIN EN ISO 17660-1 and -2

1 Re Section 7

[1] Under state laws

Draft

1.1 Weldable reinforced steels in accordance with DIN 488-1 and -2:2009-08 must be used.
1.2 Structural steels must be used in accordance with DIN EN 10025-1:2005-02.
1.3 Welding admixtures must be used in accordance with DIN EN 13479:2005-03.

2 Re Sections 8 and 9
DVS Guideline DVS 1708:2009-09 must be observed.

Appendix A 1.2.4/1

The following must be heeded for the execution of components or construction kits of steel in accordance with DIN EN 1993 in conjunction with DIN EN 1993/NA, of aluminium in accordance with DIN EN 1999 in conjunction with DIN EN 1999/NA or for composite structures or components in accordance with DIN EN 1994 in conjunction with DIN EN 1994/NA:

1 Where load-bearing features of building components or kits in the form of calculated load-bearing values, mechanical resistance or complete static calculations are stated in the declaration of performance, these count as structural analysis verifications.
2 The design of load-bearing structures on the basis of tests shall not apply.

Appendix A 1.2.4/2

1 DIN 18807-3:1987-06 in conjunction with DIN 18807-3/A1:2001-05 shall apply to the constructive formation of steel trapezoidal and corrugated profiles.
2 DIN 18807-9:1998-06 shall apply to the constructive formation of aluminium trapezoidal and corrugated profiles.

Appendix A 1.2.4/3

The following applies to cable mesh constructions and prefabricated wire ropes of steel and stainless steel with end anchoring in accordance with ETA:

1 Depending on the material number, open spiral ropes and round strand ropes of stainless steel may be allocated the corrosion categories in Table 1 under DIN EN 12944-2:1998-07.

Table 1: Corrosion categories

Material number	Corrosion categories					
	Accessible construction			Inaccessible construction		
	Protection period as per DIN EN ISO 12944-1:1998-07					
	low	average	high	low	average	high
1.4401	C3	C3	C3	C2	C2	---
1.4404	C3	C3	C3	C2	C2	---
1.4436	C5*	C5*	---	---	---	---
1.4462	C5*	C5*	---	C4	C4	C4

* Accessible constructions with moderate chloride and sulfur dioxide load

2 Creep behaviour ε_k must be taken into account in the design if the stress from constant effects, determined with 1.0 times characteristic values, is more than 40 % of 1.65 times the value of the sliding force stated in the relevant ETA. In this case, the values for ε_k according to Table 2 must be taken into account.

Table 2: Creep behaviour ε_k in %

Temperature in °C	ε_k in %
20	2.5×10^{-2}
40	3.0×10^{-2}
70	3.5×10^{-2}

[1] Under state laws

Appendix A 1.2.4/4

Re DIN EN 1993-3-2

DIN EN 13084-1, in conjunction with Appendix A 1.2.8/1, shall also apply.

Appendix A 1.2.4/5

Re DIN EN 1090-2

The following rule shall be applied as follows:

1 Load-bearing steel building components in the execution classes listed may only be manufactured by a manufacturer whose in-house production control is certified by a notified body in accordance with DIN EN 1090-1:2012-02.

2 Welded building components, load-bearing structures and steel structures in the execution classes listed may only be executed on-site by companies with proof of suitability to execute welding work in the corresponding execution classes. The following may be used as an alternative:

- a welding certificate in line with DIN EN 1090-1:2012-02 issued or certified by a notified body, if the firm's in-house production control is certified by this body in line with DIN EN 1090-1:2012-02;
- a welding certificate issued by a certification body recognised by the building authorities on the basis of DIN EN 1090-2 in conjunction with DIN EN 1090-1:2012-02, Table B.1;
- a certificate on the manufacturer's qualification under DIN 18800-7 over the remaining validity period as set out below:

Type of stress	Execution class according to DIN EN 1090-2	manufacturer's qualification according to DIN 18800/-7
static or quasi-static	EXC 1	at least class B
	EXC 2	at least class B, C or D considering the area of application specified under classes
	EXC 3 EXC 4	at least class D
susceptible to fatigue	EXC 1 EXC 2 EXC 3 EXC 4	Class E

§ 3 of the Manufacturer and User Regulation [Muster-Hersteller und Anwenderverordnung][1] remains unaffected.

Appendix A 1.2.4/6

Re DIN EN 1090-3

The following rule shall be applied as follows:

1 Load-bearing aluminium building components in the execution classes listed may only be manufactured by a manufacturer whose in-house production control is certified by a notified body in accordance with DIN EN 1090-1:2012-02.

2 Welded building components, load-bearing structures and aluminium structures in the execution classes listed may only be executed on-site by companies with proof of suitability to execute welding work in the corresponding execution classes. The following may be used as an alternative:

- a welding certificate in line with DIN EN 1090-1:2012-02 issued or certified by a notified body, if the firm's in-house production control is certified by this body in line with DIN EN 1090-1:2012-02;
- a welding certificate issued by a certification body recognised by the building authorities on the basis of DIN EN 1090-3 in conjunction with DIN EN 1090-1:2012-02, Table B.1;
- in the case of loads not subject to fatigue, a certificate on the manufacturer's qualification under DIN 4113-3 over the remaining validity period as set out below:

[1] Under state laws

Draft

Execution class according to DIN EN 1090-3	Manufacturer's qualification according to DIN V 4113-3
EXC 1	at least class B
EXC 2 EXC 3 EXC 4	at least class C

§ 3 of the Muster-Hersteller und Anwenderverordnung [Manufacturer and User Regulation][1] remains unaffected.

Appendix A 1.2.4/7

Re DIN 4119

1 The Anpassungsrichtlinie Stahlbau [Adapting Guideline for Steel Construction], October 1998 (DIBt [Deutsche Institute für Bautechnik, German institute for building technology] Mitteilungen [Communication], Sonderheft [Special edition] 11/2[5] in conjunction with the rectifications to the Adapting Guideline for Steel Construction (DIBt Mitteilungen, vol. 6/1999, p. 201[5]) and the amendment and supplementation of the Anpassungsrichtlinie Stahlbau, December 2001 (DIBt Mitteilungen, vol. 1/2002, p. 14)[5] must be followed when applying the technical standard.

2 Where reference is made to DIN 18800-7 or DIN V 4113-3 for the execution of steel or aluminium structures, DIN EN 1090-2: 2011-10 or DIN EN 1090-3:2008-09 applies.

[5] DIBt Mitteilungen can be obtained from DIBt.

Appendix A 1.2.5/1

1 In addition to DIN EN 1995-1-1, the following application standards must be observed for planning, design and execution:
DIN 20000-1:*XX* - Application of building products in structures, Part 1: Timber materials.
DIN 20000-3:2015-02 - Application of building products in structures, Part 3: Glued laminated timber and laminated beams as per DIN EN 14080
DIN 20000-4:2013-08 - Application of building products in structures, Part 4: Prefabricated structural members assembled with punched metal plate fasteners under DIN EN 14250:2010-05
DIN 20000-5:2012-03 - Application of building products in structures, Part 5: Timber structures. Strength graded structural timber with rectangular cross section.
DIN 20000-6:2015-02 - Application of building products in structures, Part 6: Dowel-type and non-dowel-type fasteners as per DIN EN 14592 and DIN EN 14545
DIN 20000-7:2015-08 - Application of building products in structures, Part 7: Finger-jointed solid wood for load-bearing purposes as per DIN EN 15497.

1a DIN EN 1995-1-1 with DIN EN 1995-1-1/NA contain no final regulations on the planning, design and execution of building components with laminated veneer timber, particularly for connections.[1]

2 Re DIN EN 1995-1-1/NA:2013-08, Section 3.6 "Adhesives":
Timber components with glued, load-bearing connections may only be used if these connections are manufactured with adhesives classified as type 1 adhesives under DIN EN 301:2013-12 or DIN EN 15425:2008-06 in conjunction with DIN EN 14080:2013-09, Annex B.2 or DIN EN 16254:2014-02. This does not apply to the connection of components in timber materials used in panelling or as pasted reinforcements as per DIN 1052-10:2012-05, Section 6.3.
Sentence 1 applies accordingly to the manufacture of glued, load-bearing connections of timber materials on-site.
There are no technical rules on the planning, design and execution of timber construction products and joints glued to timber components manufactured with adhesives for general use in structural adhesive bonds as per EN 15274 or repaired with these adhesives.[3]

3 Re ETAs for **"**Beams with one to four finger-jointed timbers that are tested for tensile strength**"**:
When designing beams, the test load coefficient must be set to a value of k_{pl} = 1.0.

4 Re ETAs for "Construction kit for timber-concrete-composite flooring":
There is no final technical rule on planning, design and execution.[3]

[1] Under state laws

5 Re EAD 130022-00-03.04:
Solid wood and glued laminated timber with finger joints may be used in service class 1 and 2.
Only "beam log" type beams may be used.

6 Where load-bearing features of building components or kits in the form of calculated load-bearing values, mechanical resistance or complete static calculations are stated in the declaration of performance, these count as structural analysis verifications.

---

[3] application of § 16a MBO[1]

Appendix A 1.2.5/2

1 For CE-marked timber construction products (e.g. solid wood, glued laminated timber, laminated beams, cross-laminated timber) without preservative treatment, the declaration of performance must contain a natural durability class as per EN 350-2. DIN 68800-1 and DIN 68800-2 exclusively apply to use and classification in use classes.

2 Timber components on which chemical wood protection is used must be designed and executed in such a way that the agents used for chemical wood protection and its conditions of use are comprehensible using the BAuA [Bundesanstalt für Arbeitsschutz und Arbeitsmedizin; Federal Agency for Industrial Safety and Occupational Medicine] or DIBt approval number.
Note: Until the biocide approval is issued by the Federal Agency for Industrial Safety and Occupational Medicine (BAuA), the wood preservative requires general building inspectorate approval.

3 Re DIN 68800-2:2012-02, Section 5.2.1.2
Open external wall claddings on perpendicular battens with underlying permanently effective water-draining and UV-resistant coating may only be executed if the films under DIN EN 13859-2:2014-07, Section 4.3.9 is demonstrated to have sufficient UV resistance in accordance with Section 5.2.1.2(e) of the standard. These films must be suitable for the effect of UV radiation, have a s_d value **≥** 1.0m and have class W1 resistance to water penetration.

Appendix A 1.2.6/1

1 Re DIN EN 1996-1-1, Section 2.5:
The design of masonry on the basis of tests shall not apply.

2 Re DIN EN 1996-1-1, Section 6.1.2.2:
To determine rated design resistance, calculate the reduction factor Φ_m, taking into account thinness and eccentricity in accordance with DIN EN 1996-1-1/NA, NCI Annex G.

3 In addition to DIN EN 1996 the following standards must be observed:
DIN 20000-401:2012-11 - Application of building products in structures, Part 401: Rules on the use of masonry bricks as per DIN EN 771-1:2011-07
DIN V 20000-402:2005-06 - Application of building products in structures, Part 402: Rules on the use of sand-lime bricks as per DIN EN 771-2:2005-05
DIN V 20000-403:2005-06 - Application of building products in structures, Part 403: Rules on the use of concrete masonry bricks as per DIN EN 771-3:2005-05
DIN 20000-404:2015-12 - Application of building products in structures, Part 404: Rules on the use of aerated concrete bricks as per DIN EN 771-4: 2011-07
DIN V 20000-412:2004-03 - Application of building products in structures, Part 412: Rules on the use of masonry mortar as per DIN EN 998-2:2003-09
or
DIN EN 105-100:2012-01 - Masonry bricks - Part 100: Masonry bricks with specific properties
DIN V 106:2005-10 - Sand-lime bricks with specific properties
DIN EN 18151-100:2005-10 - Lightweight concrete hollow blocks - Part 100: Hollow blocks with special properties
DIN EN 18152-100:2005-10 - Solid masonry or solid blocks of lightweight concrete - Part 100: Solid masonry or solid blocks with specific properties
DIN EN 18153-100:2005-10 - Concrete masonry bricks (normal concrete) - Part 100: Masonry blocks with specific properties
DIN V 18580:2007-03 - Masonry mortar with specific properties

4 Note on DIN EN 1996-1-1/NA NCI, re 8.1.1:
Where external walls are erected without plaster or other weather protection (exposed brickwork, facing panels) frost-resistant bricks must be used. The harmonised standards EN 771-1 and -3 do not indicate the frost-resistance performance feature. DIN 105-100 and DIN V 18153 describe the frost-resistance performance feature and contain corresponding verification procedures.

---

[1] Under state laws

5 For supplementary components pursuant to EN 845 there are no final technical rules on planning, design or execution[3].

[3] application of § 16a MBO[1]

Appendix A 1.2.6/2

to DIN EN 02/01/1996 in conjunction with DIN EN 02/01/1996/NA

For special developments (e.g. connections, joints, etc.), the rules of application under DIN 4102-4 must be observed, where the Eurocode does not provide any information.

Appendix A 1.2.6/3

Re DIN 1053-4

When applying the technical rule DIN EN 1996-1-1/NA/A1, DIN EN 1996-1-1/NA/A2, DIN EN 1996-3/NA/A1 and DIN EN 1996-3/NA/A2 and Appendix A 1.2.6/1 must be observed.

The provisions of DIN EN 1996-1-2 in conjunction with DIN EN 1996-1-2/NA for non-prefabricated masonry apply to fire protection masonry design, and the following must also be taken into account for fire wall classification (REI-M and EI-M criterion).

Where the masonry is not executed from room-wide façades, vertical butt joints must be inserted in the wall as follows.

In single panels a 6-mm concrete steel looped reinforcement must be positioned on-site one third of the way up and at half wall height ∅ – as shown in the picture – in the horizontal joints so that the loops overlap after the panels are laid in the butt joints. An 8 mm reinforcing steel bar should be inserted downward into these reinforcement rings∅. The requirements of Section 8.2.1 of the standard must be observed. The joint must then be filled with mortar without cavities as per Section 5.3.3 of the standard.

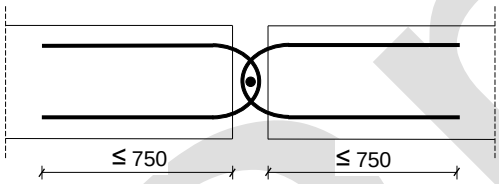

Figure: Wall-level vertical butt joints for fire walls

Appendix A 1.2.7/1

When executing glass components and glass constructions as per ETA or harmonised standards, the following must be heeded in addition to the technical rules under A 1.2.7.1 depending on the construction:

1 Glued glass constructions in façades and roofs:

1.1 Up to an installation height of 8 m above ground, either type I or type II as per ETAG [European Technical Approval Guideline] 002 Part 1, above an installation height of 8 m, type I must be used.

1.2 Glued glass constructions as per ETAG 002 Part 2 (coated aluminium) may only be used up to an installation height of 8 m above ground and only if type I is used.

1.3 The assessment of the bonded joint as per ETAG 002 Part 1 shall be performed using a global safety factor of $\gamma_{tot} = 6$.

1.4 There is no final technical rule on the planning, design and execution of glass constructions with acrylic foam tape.[3]
Use on U-PVC surfaces is not permitted.

2 There is no final technical rule on the planning, design and execution of specially drawn flat glass.[3]

[1] Under state laws

Draft

3 When planning, designing and executing glass constructions of non-load-bearing inner dividing walls as per ETAG 003, the conditions under B 2.2.1.7 must be observed.

4 When planning, designing and executing glass constructions in curtain walls as per DIN EN 13830 and in windows and outer doors as per DIN EN 14351-1, the conditions of A 1.2.7 must be observed.

[3] application of § 16a MBO[1]

Appendix A 1.2.7/2

1 Re DIN 18008-1:2010-12, Section 9:
The conditions under Section 9.1 can be met if laminated safety glass with PVB film with the following properties is used: Tear resistance ≤ 20 N/mm² and breaking elongation ≤ 250 % at a test temperature of 23 °C, test speed: 50 mm/min. (DIN EN ISO 527-3:2003-07). For coated glass as per DIN EN 1096-4, the coating must be done on the side without the PVB film.

Laminated safety glass must be classified at least 2(B)2 under DIN EN 12600.

To apply constructions under DIN 18008-4 Table B.1 and DIN 18008-5 Table B.1 the above-mentioned properties are required.
To apply constructions under DIN 18008-4 Table B.1 and DIN 18008-5 Table B.1 the above-mentioned properties are required.

2 Washers as per DIN EN 14179-2 may only be used outside thoroughfares and up to a maximum installation height of 4 m.

Appendix A 1.2.7/3

Re DIN 18008-2

1 During application, DIN 18008-2 Corrigendum 1:2011-04 must be taken into account.

2 The technical rule does not need to be applied to:

- Roof windows in housing units and rooms with similar use (e.g. hotel rooms, office spaces) with a light surface (inner dimensions) of up to 1.6 m².
- Glazing in cultivation greenhouses/commercial production greenhouses.

Appendix A 1.2.8/1

Re DIN EN 13084-1

Re Section 5.2.4.1:
The effects of earthquakes are determined as per Section 1.2.9.

Appendix A 1.2.8/2

Re DIN EN 13084-6 and DIN EN 13084-8

DIN EN 13084-1 in conjunction with Appendix A 1.2.8/1 shall also apply.

Appendix A 1.2.8/3

Re DIN EN 12812

When applying this technical rule, the "Application guideline for falsework in accordance with DIN EN 12812", August 2009, which is published in DIBt Mitteilung[5] vol. 6/2009 p. 227, must be observed.

[1] Under state laws

Draft

Appendix A 1.2.8/4

For working and protective scaffolding and for falsework, tubular steel scaffolding coupling may continue to be used with screw or wedge closure manufactured based on a test report pursuant to the former state test mark ordinances, provided a there was a test report for use before 01 January 1989 at a minimum. Scaffolding components that meet these conditions are published in a list in DIBt Mitteilungen[5], vol. 6/97, p. 181.

Appendix A 1.2.8/5

When applying the technical rules, the "Application guideline for working scaffolds", published in November 2005 in DIBt Mitteilungen[5] vol. 2/2006 p. 61, must be observed.

[5] DIBt Mitteilungen can be obtained from DIBt.

Appendix A 1.2.8/6

Re guidelines on wind turbines, October 2012 version, corrected version, March 2015

Compliance with the requirements regarding the stability of the tower and the foundations of the wind turbine can be considered satisfied if the verification procedure was performed in accordance with the guidelines for wind turbines referred to here.

The following is to be observed when applying the technical rule:

1 Where standards refer to DIN 18800-7 or DIN V 4113-3 for the execution of steel or aluminium structures, DIN EN 1090-2 applies: 2011-10 and DIN EN 1090-3:2008-09.

2 Distances to transport routes and buildings, regardless of the requirements of other legal areas, must be adhered to due to the danger of falling ice, where there may be a threat to public safety. Distances measured from the tower axis greater than 1.5 times (rotor diameter plus hub height) are in general sufficient in regions that are not particularly affected by ice. In other cases, an expert opinion is required.

3 The following are counted in addition to the civil engineering documents for wind turbines listed in Section 3(A) to (L) of the guideline:

3.1 the expert opinion on the turbulence intensity on-site and on the suitability of the distances to neighbouring wind turbines in respect of the safety of existing and potential future turbines and to the proposed turbine, where the distances set out in Section 7.3.3 of the guideline are not adhered to.

3.2 an expert opinion on the operating safety of facilities, whereby the operation of wind turbines can be safely ruled out or prevented in the case of ice accretion (e.g. rotor blade heating), where the required distances to take account of the danger of falling ice cannot be adhered to,

3.3 the subsoil expert report set out in Section 3(H) of the guideline to confirm that the requirements underlying the layout of the turbine on the subsoil are present at the installation location.

3.4 fatigue life as set out in Section 9.6.1 of the guideline.

4 For wind turbines with a rotor sweep of less than 200 m² and AC voltage of under 1 000 V or DC voltage of 1 500 V, the following civil engineering documents listed under Section 3(A) to (L) of the guideline are not required:
- the expert opinions as per Section 3(I) and (J), (K) and (L) of the guideline.

5 Points 3.1 to 3.4 do not apply to wind turbines up to 10 m tall, measured from the surface of the ground up to the highest point of the area swept by the rotor, and with a rotor diameter of up to 3 m.

Appendix A 1.2.8/7

The following applies to the use of stationary cylindrical steel tanks in accordance with EN 12285-2:2005:

- In flood plains, the tanks must be positioned in such a way that they cannot be reached by flood water.
- They may not be positioned in earthquake zones 1 to 3 (DIN 4149).

[1] Under state laws

Draft

Appendix A 1.2.8/8

The following applies to the use of stationary thermoplastic tanks in accordance with EN 13341:2005+A1:2011:

- In flood plains, the containers must be positioned in such a way that they cannot be reached by flood water.
- They may not be positioned in earthquake zones 1 to 3 (DIN 4149).
- Fire prevention requirements (fire exposure time) may not be met by these tanks.

Appendix A 1.2.9/1

Re DIN 4149

The following is to be observed when applying the technical rule:

1 In earthquake zone 3, roofing on roofs with more than 35° inclination and in earthquake zones 2 and 3 the free-standing parts of the chimneys over the roofs must be secured against the effects of earthquakes using appropriate measures to ensure that no parts can fall on adjacent public thoroughfares or on entrances to the physical structures.

2 In respect of the allocation of earthquake zones and geological underground classes, reference is made to the map of earthquake zones and geological underground classes for xxx[1)], published by xxx[1)] or DigitalService CD-PRINT, Isener Str. 7, 84405 Dorfen. The table **"**Classification of earthquake zones according to administrative limits**"** is available at www.is-argebau.de or www.dibt.de/de/Geschaeftsfelder/BRL-TB.html#TB.

2a The references to DIN 1045-1:2001-07 and DIN 1052:2004-08 are replaced as follows throughout the standard text:
DIN 1045-1:2001-07 replaced by a reference to DIN EN 1992-1-1 in conjunction with DIN EN 1992-1-1/NA
DIN 1052:2004-08 replaced by a reference to DIN EN 1995-1-1 in conjunction with DIN EN 1995-1-1/NA.

2b For earth anchors in structures in earthquake zones of Germany under seismic influence, all anchors with general building inspectorate approval [German designation: abZ] may be used that refer to Annex C of ETAG 001 for the measurement of the fastenings. The earth anchors shall be designed in accordance with the design process given in the abZ for static and quasi-static effects.

3 Re Section 5.5
When determining the effective masses to calculate earthquake load, snow loads shall be multiplied in equation (12) with the combination coefficient $\Psi_2 = 0.5$. These reduced snow loads must also be taken into account in the proof of stability.

4 Re Section 6
- In 6.2.2.4.2 (8), the reference to "Section (7)**"** is replaced by the reference to "Section (6)".
- The condition "or" is replaced by "and" in the first sentence of 6.2.4.1(5).

5 Re Section 8:
In earthquake checks of steel and pre-stressed concrete constructions under this standard, DIN EN 1992-1-1:2011-01 shall apply in conjunction with DIN EN 1992-1-1/NA:2013-04.

- Paragraph 8.2(3) shall be worded as follows: "The dimensioning and structural design provisions specified in DIN EN 1992-1-1:2011-01 shall apply. According to this, the procedures specified for determining force variables in 5.5 and 5.6 of DIN EN 1992-1-1:2011-01 shall not apply unless dual utilisation of plastic reserves (due to q > 1 and non-linear calculation assumptions) is thereby excluded."
- Paragraph 8.2(5)(a) and paragraph 8.3.2(2) shall be worded as follows: "In building components used to mitigate the effects of earthquakes, type B500B steel with increased ductility shall be used. This may be dispensed with if it is ensured that the areas affected by earthquakes do not plastify without taking into account one of the behaviour coefficients reduced by the mathematical earthquake effects (i.e. q = 1.0)."
- Paragraph 8.3.5.3(4)(1) shall be worded as follows: "Transverse reinforcement to be provided by overlapping joints must be dimensioned pursuant to DIN EN 1992-1-1, Section 8.7.4."
- Paragraph 8.4(2), sentence 2 shall be worded as follows: "The regulations under DIN EN 1992-1-1, Section 9.4.1(3) shall be taken into account here."
- Paragraph 8.4(3), sentence 2 shall be worded as follows: "The minimum reinforcement grade for shear reinforcement shall be determined pursuant to DIN EN 1992-1-1, Section 9.2.2 (5) including DIN EN 1992-1-1/NA, NDP to 9.2.2 (5)."

6 Re Section 9
- For earthquake checks of steel structures, the references to DIN 18800-1 to 18800-4 and DIN V ENV 1993-1-1 with DASt [Deutsche Ausschuß für Stahlbau; German commission on steel construction] Guideline 103 shall be replaced by DIN EN 1993-1-1 in conjunction with DIN EN 1993-1-1/NA and DIN EN 1993-1-8 in conjunction with DIN EN 1993-1-8/NA.

[1] Under state laws

- In paragraph 9.3.4(1), the reference to DIN 18800-7 is replaced by the reference to DIN EN 1090-2.
- Ductility classes 2 and 3 may only be used if the maximum value of the tensile yield point $_{fy,\,max}$ (see DIN 4149:2005-04 Section 9.3.1.1) and the minimum notch impact strength for the steel to be used stated in paragraph 9.3.1.1(2) must be documented in the building documents.
- Section 9.3.5.1(2)(c) shall be worded as follows:
  "c) for tensile stressed building components, the condition under DIN EN 1993-1-1:2010-12, 6.2.3(3) must be adhered to instead of hole weakening ($_{Nu,R,d} > N_{pl,R,d}$)"
- In paragraph 9.3.5.4 (7) the reference to paragraph "9.3.3.3(10)" is replaced by the reference "9.3.5.3(10)".
- In paragraph 9.3.5.5(5), formula 87 shall be worded as follows:

$$\Omega_i = \frac{M_{pl,Verb,i}}{M_{sdi}}$$

- In paragraph 9.3.5.8(1) the reference to Sections "8 and 11" is replaced by the reference "8 and 9".

7 Re Section 10

- In earthquake checks of timber structures under this standard, DIN EN 1995-1-1:2010-12 shall apply in conjunction with DIN EN 1995-1-1/NA:2013-08.
- Paragraph 10.1(5) shall be worded as follows:
  "(5) In earthquake zones 2 and 3, a combination of structural models of ductility classes 1 and 3 for the two main directions of the structure may not be used in the calculation."
- Paragraph 10.3(1) shall be worded as follows:
  "(1) The conditions of DIN EN 1995-1-1:2010-12, Section 3 in conjunction with DIN EN 1995-1-1/NA:2013-08 must be adhered to."
- In paragraph 10.3(2) the fourth bullet point shall be worded as follows:
  "– the usability of multi-layer solid wood panels and their fasteners must be demonstrated;"
- In paragraph 10.3(3) the second bullet point shall be worded as follows:
  "– the increase in nail distance at the same load-bearing capacity pursuant to DIN EN 1995-1-1:2010-12, Section 9.2.3.2(4) shall not be used in earthquake zones 2 and 3;"
- In paragraph 10.3(3) the third bullet point shall be worded as follows:
  "– the application of glued panels leads to classification in ductility class 1, including in the case of simultaneous use of mechanical fasteners."
- Paragraph 10.3(6) shall be worded as follows:
  "(6) When applying the equations to determine load-bearing capacity of dowel-type fasteners and for shearing pursuant to DIN EN 1995-1-1/NA:2013-08 Section NCI Re 8.2 to NCI Re 8.7 minimum thickness in timber materials as permitted in DIN EN 1995-1-1/NA:2013-08 NCI NA.8.2.4 (NA.2) and NCI NA.8.2.5 (NA.4) is not permissible in earthquake zones 2 and 3."
- Section 10.3(7) shall be supplemented as follows:
  "(7) The load-bearing capacity of the fasteners pursuant to DIN EN 1995-1-1:2010-12, Section 9.2.4.2(5) may not be increased."

8 Re Section 11

- Paragraphs 11.7.3 (1), 11.7.3(2) and 11.7.3(3) are worded as follows (Tab. 16 is deleted):
  "(1) The rated value Ed of the decisive force variables in the earthquake measurement situation shall be determined using equation (37). Depending on the existing boundary conditions, either the simplified or the more precise calculation methods under DIN 1053-1:1996-11 may be applied."
  "(2) When applying the simplified calculation method under DIN 1053-1:1996-11 the dimensioning load-bearing capacity Rd shall be determined from the permissible tensions increased by 50 %. An explicit mathematical proof of sufficient spatial stiffness may not be dispensed with."
  "(3) When applying the more precise calculation method, the rated value E_d of the decisive force variables must be determined using γtimes the effects pursuant to DIN 1053-1:1996-11. The decisive safety factor γ may be reduced to 2/3 of the values set out in Section 7 of DIN 1053-1:1996-11.
  The mathematical strength values set out in DIN 1053-1:1996-11 shall be used as dimensioning load-bearing capacity R_d."

9 Re Section 12

- For earthquake checks of foundations and retaining structures under this standard, DIN 1054:2005-01 including DIN 1054 Corrigendum 1:2005-04, DIN 1054 Corrigendum 2:2007-04, DIN 1054 Corrigendum 3:2008-01 and DIN 1054 Corrigendum 4:2008-10 as well as DIN 1054/A1:2009-07 shall be applied.
- Paragraphs 12.1.1(1) and 12.1.1(2) are worded as follows:
  "(1) Where the proof is conducted based on capacity measurement, Section 7.2.5 must be observed."
  "(2) Proof under action combinations as per Section 7.2.2 includes:
  (a) proof of sufficient load-bearing capacity for the foundation elements under the building material rules of this standard and the relevant technical standards;
  (b) relevant proof of foundations as per DIN 1054. Restrictions in respect of the general applicability of verification procedures for the earthquake load case in DIN 1054 or in its accompanying calculation

[1] Under state laws

Draft

standards need not be observed if there are no unfavourable sold conditions (debris, loose sediment, artificial recharge, etc.)."

- Paragraph 12.1.1(4) shall be worded as follows:
  "(4) When demonstrating slide stability, the characteristic value of earth resistance (passive earth pressure) may only be used with 30 % maximum of its nominal value."
- Paragraph 12.2.1(2) shall be worded as follows:
  "Earth pressure effects during earthquakes can be determined in simplified fashion, with the earth pressure value k replaced by $k_e = k + a_g \cdot \gamma_I \cdot \frac{S}{g}$."

A 2 Fire Protection

A 2.1 General fire prevention requirements for physical structures

Under § 3 MBO in conjunction with § 14 MBO, physical structures must be positioned, erected, converted and maintained in such a way that

- fire emergence is prevented,
- the spread of fire and smoke (fire expansion) is prevented,
- during a fire it is possible to rescue people and animals,
- effective fire-fighting is possible.

The specifications of §§ 5, 26 to 36, 39 to 42, 46 and 47 MBO and the technical requirements in the following sections clarify the fire protection requirements for physical structures which under § 2(4) MBO are not special constructions (i.e. standard buildings). For special constructions pursuant to § 2(4) MBO in conjunction with § 51 MBO, the technical requirements under Section A 2.1.20 must also be observed.

For construction products under current harmonised European specifications whose use has an impact on physical structures in terms of compliance with fire protection requirements, classifications of performance data and related usability and execution conditions are exclusively included in Technical Rule A 2.2.1.2 in respect of requirements for construction works based on fire protection clarifications (A 2.1.1 et seq.).

A 2.1.1 Requirements on the accessibility of physical structures

To carry out fire-fighting and rescue measures, access points must be provided to the site pursuant to § 5 MBO to the fire service; Technical Rule A 2.2.1.1 must be observed.

In open carriageways and passageways through which the only escape route to public thoroughfares leads or the accessibility for the fire service is ensured, only non-combustible insulating layers are permitted on supports, walls and ceilings.

A 2.1.2 Requirements on the fire behaviour of parts of physical structures

A 2.1.2.1 General

To meet the basic requirements, general requirements for the fire behaviour of parts of physical structures are set out in § 26(1) MBO. To this end, § 26(1) MBO contains specific definitions:

- non-combustible
- low flammability
- normally flammable

For parts of physical structures for which the requirements do not specify non-combustible or low flammability in respect of the building materials to be used, it must be ensured that fire cannot spread in or around the buildings through unnoticed progressive glowing and/or smouldering.
Technical Rule A 2.2.1.2 must be observed to meet the following requirements.

A 2.1.2.2 Non-combustible

For use in physical structures, it must be ensured that parts of physical structures do not contribute to a progressive, partly developed fire. Depending on use, no or restricted inflammation, the least possible smoke, no progressive glowing and/or smouldering and or flaming droplets (except for aluminium) or particles may occur; the component type, melting point/melting temperature and dimensional stability must be taken into account.

The requirements may be met with building materials that permanently comply with the criteria specified in DIN 4102-1:1998-05, Section 5.1 or 5.2 during a fire and that are classified under Section 4.1, where applicable with the melting point information of at least 1000°C pursuant to DIN 4102-17:1990-12.

[1] Under state laws

A 2.1.2.3 Low flammability

For use in physical structures, it must be ensured that parts of physical structures only make a limited contribution to a progressive, incipient or developing fire and that the fire can only spread to a limited extent. Fire effects involving a burning object in a room (e.g. waste paper basket in the corner of a room) can be assumed for building materials except for external wall claddings and floorings for external wall claddings flames emanating from a wall opening (see also A 2.1.5). For floorings, a fire situation can be assumed if the flames emanate out of the door opening to an adjacent room and horizontal fire and smoke propagation are harmless.

Depending on the use of the building material, inflammation may only occur after flames are present for a specific time, only when smoke reaches a specific temperature, only where there is a limited release of energy, limited smoke development, no spread of fire, no progressive glowing and/or smouldering, where applicable no flaming droplets or particles.

These requirements may be met with building materials that permanently comply with the specified criteria pursuant to DIN 4102-1:1998-05, Section 6.1 during a fire and that are classified under Section 4.1.

Parts of physical structures must not produce any flaming droplets or particles and the criteria under DIN 4102-16:2015-09 Section 9.3 must likewise also be met.

A 2.1.2.4 Normally flammable

For use in physical structures, it must be ensured that parts of physical structures only make a limited contribution to an incipient fire. Inflammation and fire spread must be limited for a specific period and, where applicable no flaming droplets or particles must occur during a fire due to a low, defined flame (match flame). The requirements may be met with building materials that permanently comply with the specified criteria pursuant to DIN 4102-1:1981-05, Section 6.2 during a fire.

Parts of physical structures must not produce any flaming droplets or particles and the criteria under DIN 4102-16:2015-09 Section 9.3 must likewise also be met.

Where several integral parts are assembled for use, the requirements for parts of physical structures must also be met after assembly, unless overall the fire behaviour is reached that all other requirements for individual components are met.

Where an integral part is used for the physical structure that does not meet the “normally flammable” requirement, (easily flammable) § 26(2) MBO must be adhered to.

A 2.1.3 Requirements on the fire resistance of parts of physical structures

A 2.1.3.1 General

To meet the basic requirements, general requirements for the fire resistance of parts of physical structures are set out in § 26(2) MBO and a distinction is made between

- Fireproof
- highly fire retardant
- fire retardant

building components.

As regards load-bearing and stiffening building components, fire resistance relates to their stability in the event of a fire; as regards components such as space-enclosing walls and ceilings, fire resistivity relates to their ability to resist fire spread (space barrier).

Fire-resistant components must also meet the minimum requirements for fire behaviour of their building materials:

a) fire-resistant components:

   load-bearing and stiffening parts must consist of non-combustible building materials and space-enclosing components must also have a layer of non-combustible building materials running through them,

b) highly fire-retardant components:

   where building components whose load-bearing and stiffening parts consist of combustible building materials, they must have effective all-over fireproof cladding made up of non-combustible building materials (fire protection cladding), and – where available – non-combustible insulating material.

   The load-bearing and stiffening parts of space-enclosing highly fire-retardant components may also consist of non-combustible building materials (i.e. they must have a layer of non-combustible building materials running through them) or must fully consist of non-combustible building materials.

c) fire-retardant components:

   Load-bearing and stiffening components may be made of combustible building materials. This also applies to space-enclosing components.

[1] Under state laws

Draft

In principle, fire resistance is based on the applicable building inspectorate requirements (building category, floor height, building type) on classifications in fire resistance classes classified on the basis of fire tests according to the standard temperature-time curve in Technical Rule A 2.2.1.2 of the following technical requirements.

A 2.1.3.2 Requirements on stability in the event of fire

A 2.1.3.2.1 General

To meet the requirements of § 12 MBO, load-bearing parts of physical structures must remain stable even if a fire develops over a specific period of time. In general, the standard temperature-time curve should be used as the fire exposure for load-bearing structures.

Cross-section modifications and penetrations – including those performed subsequently – and deformations due to fire exposure must be taken into account insofar as they could have an impact on stability.

A 2.1.3.2.2 Fire-resistant

The stability of part of the physical structure must be ensured for at least 90 minutes in the event of fire exposure using the standard temperature-time curve pursuant to DIN 4102-2:1977-09, Section 6.2.4.

A 2.1.3.2.3 Highly fire-retardant

The stability of part of the physical structure must be ensured for at least 60 minutes in the event of fire exposure using the standard temperature-time curve pursuant to DIN 4102-2:1977-09, Section 6.2.4.

A 2.1.3.2.4 Fire-retardant

The stability of part of the physical structure must be ensured for at least 30 minutes in the event of fire exposure using the standard temperature-time curve pursuant to DIN 4102-2:1977-09, Section 6.2.4.

A 2.1.3.2.5 Fire resistance of 120 minutes

The stability of part of the physical structure must be ensured for at least 120 minutes in the event of fire exposure using the standard temperature-time curve pursuant to DIN 4102-2:1977-09, Section 6.2.4. This part must not make any contribution to the fire (non-combustible).

A 2.1.3.3 Space-barrier requirements in the event of fire

A 2.1.3.3.1 General

Parts of physical structures are space-enclosing if they prevent the spread of fire for a specific period of time as specified below, the space barrier is not affected, including near connections and joints to adjoining areas of physical structures and if the side not exposed to fire does not show any smoke or droplets of particles from integral parts.

Unless otherwise specified, prevention of fire spread must always be ensured for each possible direction in which the fire could develop (e.g. from the inside out and from the outside in). Unless otherwise permissible, space-enclosing parts of physical structures shall not contribute to the fire in respect of fire behaviour (non-combustible).

Space-enclosing parts of physical structures must extend at least to the outer boundary of the physical structure, unless it is ensured during use that these space-enclosing parts adjoin other parts of the physical structure that have at least the same space-enclosing or stability period in the event of fire. Cross-section modifications and penetrations – including those performed subsequently – and deformations during a fire must be taken into account insofar as they could have an impact on the space barrier.

Unless otherwise specified, openings are not permitted in space-enclosing parts.

Component joints must remain closed to ensure the space is enclosed during a fire. This requirement may be met with non-combustible mineral building materials (such as mortar and concrete) or with mineral insulating materials with a melting point of at least 1000 °C as per DIN 4102-17:1990-12 and with products that safely close the remaining cross section.

Technical Rule A 2.2.1.3 must be observed for the execution of non-load-bearing, space-enclosing components.

A 2.1.3.3.2 Fire-resistant

The space barrier in part of a physical structure must be ensured for at least 90 minutes in the event of fire exposure using the standard temperature-time curve pursuant to DIN 4102-2:1977-09, Section 6.2.4. The stability of non-load-bearing components under their own weight in the event of fire must be demonstrated.

In respect of fire behaviour, these space-enclosing components may use combustible parts (low flammability, normally flammable) if the load-bearing and stiffening components do not contribute to the fire (non-combustible) and, if the space-enclosing component is part of an assembly, a part is positioned vertically in the direction of the fire over the entire dimensions of the space-enclosing part.

[1] Under state laws

Draft

A 2.1.3.3.3 Highly fire-retardant

The space barrier in part of a physical structure must be ensured for at least 60 minutes in the event of fire exposure using the standard temperature-time curve pursuant to DIN 4102-2:1977-09, Section 6.2.4. The stability of non-load-bearing components under their own weight in the event of fire must be demonstrated.
In respect of fire behaviour, load-bearing, stiffening or space-enclosing parts that contribute to the fire (low flammability, normally flammable) are permitted if they have effective all-over fireproof cladding that does not contribute to the fire (non-combustible) and that prevents

- the load-bearing and stiffening parts from burning,
- the introduction of fire and smoke in wall and ceiling components via joints, installations or fittings and the spread of fire within these components and
- the transmission of fire and smoke via connection joints of space-enclosing components in adjoining utilisation units or rooms.

All other parts of the components, such as insulating materials, must not make any contribution to the fire (non-combustible).
Technical Rule A 2.2.1.4 must be observed for highly fire-retardant, space-enclosing components in timber construction.

A 2.1.3.3.4 Fire-retardant

The space barrier in part of a physical structure must be ensured for at least 30 minutes in the event of fire exposure using the standard temperature-time curve pursuant to DIN 4102-2:1977-09, Section 6.2.4. The stability of non-load-bearing components under their own weight in the event of fire must be demonstrated.

In respect of fire behaviour, components that contribute to fire are permissible (low flammability, normally flammable).

A 2.1.3.3.5 Fire resistance of 120 minutes

The space barrier in part of a physical structure must be ensured for at least 120 minutes in the event of fire exposure using the standard temperature-time curve pursuant to DIN 4102-2:1977-09, Section 6.2.4. The stability of non-load-bearing components under their own weight in the event of fire must be demonstrated. In respect of fire behaviour, only components that do not contribute to fire are permissible (non-combustible).

A 2.1.4 Load-bearing and stiffening components

Parts of physical structures that bear (support) loads or stiffen parts of physical structures must remain stable under this load over a specific period in the event of fire as per Section 2.1.3.2.

Where load-bearing parts of physical structures are made of concrete, steel, aluminium, timber or masonry, the technical rules on structural fire design in A.1.2.3, A 1.2.4, A 1.2.5 and A 1.2.6 must be observed. If stability in the event of fire is demonstrated mathematically, the following applies:

- for load-bearing parts that must be fire-resistant, load-bearing capacity must be mathematically demonstrated for at least 90 minutes under fire exposure using the standard temperature-time curve,
- for load-bearing parts that must be highly fire-retardant, load-bearing capacity must be mathematically demonstrated for at least 60 minutes under fire exposure using the standard temperature-time curve,
- for load-bearing parts that must be fire-retardant, load-bearing capacity must be mathematically demonstrated for at least 30 minutes under fire exposure using the standard temperature-time curve,
- for load-bearing parts that must have fire resistance of 120 minutes, load-bearing capacity must be mathematically demonstrated for at least 120 minutes under fire exposure using the standard temperature-time curve.

Where load-bearing and stiffening parts of physical structures are designed for the effects of a natural fire, Appendix A 1.2.1/3 must be observed.
Technical Rule A 2.2.1.4 must be observed for highly fire-retardant, load-bearing components in timber construction.
Note: A component that is only used for stiffening may also display other fire behaviour than the fire-resistant component it is stiffening if the entire system has sufficient fire resistance.

A 2.1.5 External walls

Non-load-bearing external walls and non-load-bearing parts of external walls of physical structures, i.e. parts that bear no vertical load apart from their own weight and that are only designed for bearing the load of their own weight and wind loads, must under § 28 MBO in principle consist of non-combustible building materials so that the spread of fire to and within these parts is limited for a sufficient length of time.

They may be made of combustible building materials if the non-load-bearing external walls and the non-load-bearing parts of external walls are fire-retardant as space-enclosing components. In derogation of the specifications in Section A 2.2.1 (re § 26 MBO), failure after no less than 30 minutes pursuant to DIN 4102-3:1977-09, Section 5.3.2 (reduced standard temperature curve) may occur for fire from the outside in. Windows and doors (punctuated façades) are excluded from these specifications; the required height of window sills are given in the regulations on traffic safety under § 38(3).

[1] Under state laws

Surfaces of external walls and external wall cladding must in principle have low flammability in their individual components. In addition, external wall cladding with several components must have low flammability overall.
The results of effects pursuant to E DIN 4102-20:2016-03 must be taken into account for external wall cladding with low flammability.

For external wall cladding designed as a thermal insulation system with EPS insulating materials, fire exposure from outdoors directly affecting the lower area of the façade must also be taken into account. Appropriate constructive measures must be provided for this purpose or Technical Rule A 2.2.1.5 must be adhered to.

If the use of building materials with low flammability is not prescribed for buildings and where easily flammable building materials are used in conjunction with other building materials pursuant to § 26(1)(2) MBO, the connection must be durable. This is not the case if such external wall cladding is accessible and can be damaged.

For external walls with rear-ventilated cladding with cavities that extend over several storeys or that extend above fire walls, additional arrangements must be made to limit the spread of fire and Technical Rule A 2.2.1.7 must be observed if they are made of non-combustible building materials.

For buildings with double façades, the spread of fire must be effectively restricted via interspaces in the storey ceilings. The requisite arrangements must be made in individual cases and detailed in the fire protection certificate.

A 2.1.6 Dividing walls

Depending on how they are used in the physical structure, dividing walls must, pursuant to § 29 MBO, ensure a space barrier as per Section A 2.1.3.3 in the event of fire for a sufficiently long period and be stable as bearing wall as per Section A 2.1.3.2.

Technical Rule A 2.2.1.3 must be observed for the execution of non-load-bearing, space-enclosing and fire-resistant dividing walls.

Connections including those of joint designs, pipe penetrations and cross-section reductions for the installation of sockets, switch boxes, line splitters etc. must not adversely affect the space barrier and, for load-bearing walls, stability.

Openings in dividing walls are only permitted if restricted to the number and size necessary for their purpose as each opening reduces the wall space barrier.

Where door openings are necessary in dividing walls to connect to utilisation units, these must – regardless of the fire resistance of the dividing walls – have durably fire-retardant, sealed and self-closing barriers to prevent the spread of fire. The barriers must not lose the space barrier and sealing on either side pursuant to DIN 4102-2:1977-09, Section 6.2.4 for at least 30 minutes; they must satisfy the criteria under DIN 4102-5:1977-09, Sections 5.2.2 to 5.2.8. These fire protection barriers must consist of normally flammable building materials at the least, including all accessories and necessary fasteners. Fire protection barriers must have adequate locks in the event of fire with an adequate latch bolt to prevent opening and spread of fire if pressure changes due to fire. The fire protection barriers are durably self-closing if the permanent functionality criteria of DIN 4102-18:1991-03 are met.

Technical Rule A 2.2.1.2 must be observed to meet these requirements.

So that people can be rescued and the fire service can reach the fire source or rescue people, a fire protection barrier in the form of a door must be manually opened until it catches fire. These requirements also apply to fire protection barriers in the form of a sliding, lifting or roll door for example, which take a long time to open and close, where applicable with auxiliary power, meaning that a passdoor or separate door must be provided for these fire protection barriers for rescue purpose.

A fire protection barrier can be kept open if it has a device that immediately and safely closes the fire protection barrier in the event of fire or smoke (locking mechanism). This also applies if the necessary power supply is interrupted. To pre-emptively prevent the spread of fire, closing may be activated using other additional safety equipment (e.g. fire alarm systems); Technical Rule A 2.2.1.8 must be observed.

Where dividing walls are designed as fire-resistant glazing, the requirements for space-enclosing components are met if during a fire pursuant to DIN 4102-13:1990-05, Section 6.1 the spread of fire and smoke and the passage of heat radiation is prevented over the minimum period of time and the criteria under DIN 4102-13:1990-05 are satisfied. Technical Rule A 2.2.1.2 must be observed to meet these requirements. To ensure that the prevention of spread of fire is not affected, barriers of necessary openings in a dividing wall designed as fire-resistant glazing must correspond to the fire resistance time of the fire-resistant glazing; the requirements on fire resistance time also apply.

A 2.1.7 Fire walls

Fire walls, or walls permitted instead of fire walls, of physical structures must not make any contribution to the fire pursuant to § 30 MBO to ensure the protection aim (non-combustible), unless otherwise specified. External wall cladding on such walls must not make any contribution to the fire (non-combustible).

[1] Under state laws

Fire walls must also be stable and space-enclosing so that additional mechanical loads from parts of the physical structure that fail in the event of fire have an effect on these walls (impact). This also applies to walls used instead of fire walls, unless otherwise specified.

Fire walls are only stable and space-enclosing if they meet the requirements of Sections A 2.1.3.2 and A 2.1.3.3 without additional measures and also withstand the effects as per DIN 4102-3:1977-09, Section 4.2.2 to 4.2.5. With the exception of effects as per DIN 4102-3:1977-09, Section 4.2.3, this also applies to non-load-bearing fire walls and walls used instead of fire walls.

Connections in other components in fire walls and walls used instead of fire walls, including joint designs, pipe penetrations and cross-section reductions for the installation of sockets, switch boxes, line splitters etc. must not adversely affect the space barrier or stability.

In inner fire walls and inner walls used instead of fire walls, openings as per § 30(8) MBO are only permissible if they have durably sealed and self-closing barriers (doors, gates, roller gates, vents, etc.) with fire resistance time appropriate for the wall and if they are restricted to the number and size necessary for their purpose to prevent the spread of fire; the space barrier must be secured. The requirements under Section A 2.1.6 also apply, including in respect of keeping this fire protection barrier open.

In inner fire walls and inner walls used instead of fire walls, glazings as per § 30(9) MBO are only permissible if they have a fire resistance time appropriate for the wall, are space-enclosing and are restricted to the number and size necessary for their purpose to prevent the spread of fire. This requirement is met with fire-resistant glazing if during a fire pursuant to DIN 4102-13:1990-05, Section 6.1 the spread of fire and smoke and the passage of heat radiation is prevented over the minimum period of time and the criteria under DIN 4102-13:1990-05 are satisfied. Technical Rule A 2.2.1.2 must be observed to meet these requirements.

A 2.1.8 Ceilings

Ceilings between storeys must remain stable and space-enclosing for a sufficient length of time in physical structures pursuant to § 31 MBO and must meet the requirements of Sections A 2.1.3.2 and A 2.1.3.3 in the event of fire exposure from above. To prevent fire formation, ceilings must be non-combustible unless otherwise specified.

Connections including those for joints to other components, including on external walls, must be designed to maintain stability and the space barrier to prevent the spread of fire.

In ceilings, openings as per § 31(4)(3) MBO are only permissible if they have durably sealed and self-closing barriers (vents, sliding panels, etc.) and if they are restricted to the number and size necessary for their purpose to prevent the spread of fire; the space barrier must be secured. This requirement is met with components (fire protection barriers) that have the same fire resistance time as the ceiling. The requirements under Section A 2.1.7 also apply, including in respect of keeping this fire protection barrier open.

A 2.1.9 Roofs

The roof covering as part of the physical structure consists of the rainwater-draining layer (roof membrane), including parts used for thermal insulation and to protect against the penetration of moisture, parts needed to transfer load to the parts bearing the roof covering load (insulating materials, insulation locks, underlays, battens). Roof coverings also include transparent areas and barriers to openings and their barriers on the roof covering. Green roof coverings are permissible.

Unless otherwise allowed, roof coverings must withstand fire exposure for a sufficient length of time in the event of fire from the outside into the physical structure through heat radiation or burning parts from other physical structures and the spread of fire to the physical structure pursuant to § 32 MBO (rigid roofing). The roof covering must only sustain limited damage both vertically and horizontally and must only make a limited contribution to the fire. The roof inclinations must be taken into account because the fire behaviour of roofs can vary according to roof inclination.

This requirement is met when non-green roofs are used that at a minimum meet the criteria set forth in DIN 4102-7:1987-03, Section 4(a) to (e) during a fire as set out in DIN 4102-7:1987-03, Section 6.1 to 6.4 and Section 7.

For specific combustible transparent areas or barriers of openings for which there is no proof of rigid roofing, use as a roof covering is permissible without this leading to the expectation that the prevention of fire formation or spread of fire in or on the roof is impaired if

- the sum of the sections does not exceed 30 % of the roof area,
- the sections are at least 5 m from the fire walls of directly adjoining higher buildings or sections of buildings, and the sections
- are clerestory strips of maximum 2 m wide and 20 m long, are at least 2 m from each other and from the roof edges, or
- are dome lights with an area of not more than 6 m² each, are at least 1 m from each other and from the roof edges and are at least 2 m from clerestory strips made of combustible building materials.

[1] Under state laws

For roofs on buildings with adjoining eaves, in addition to the rigid roof covering, each roof must be space-enclosing for a sufficient length of time and the parts bearing and stiffening the roof must remain stable for a sufficient length of time to prevent the spread of fire. This requirement is met when roofs are used that ensure the space barrier as per Section A 2.1.3.3 for at least 30 minutes in the event of fire from the inside out. The parts supporting and stiffening the roof must ensure stability as per Section A 2.1.3.2 for at least 30 minutes in the event of fire.

For annexes adjacent to parts of a physical structure that have openings or with permissible adjoining vertical parts in respect of the space barrier or stability without requirements (§ 32(7) MBO), to prevent the spread of fire from the annex to the adjoining physical structure. the roof of the annex must be space-enclosing up to a distance of at least 5 m for a sufficient length of time and the parts supporting and stiffening the roof remain stable for a sufficient length of time. This requirement is met when roofs are used that ensure the space barrier for the period of time as per Section A 2.1.3.3, for which the ceilings of the adjoining physical structure must also ensure the space barrier. The parts supporting and stiffening the roof must ensure stability as per Section A 2.1.3.2 for at least the period of time to be ensured for the roof space barrier in the event of fire.

To prevent fire spreading to parts of the physical structure via roof installations or structures such as heat extraction surfaces or smoke and heat extractors, under § 32(5) MBO these roof installations or structures must be at a sufficient distance from combustible parts or these parts must be non-combustible.

A 2.1.10 Stairs

To ensure the protection aim, in the event of fire, load-bearing parts of necessary stairs in buildings pursuant to § 34(4) MBO must not contribute to the fire (non-combustible) and must remain stable for a sufficient length of time within these physical structures, depending on building class. The use of at least normally flammable load-bearing parts is permissible for necessary stairs pursuant to § 34(4)(3) MBO if they are fire-retardant.

A 2.1.11 Necessary stairwells

To ensure the protection aim and secure the escape routes via necessary stairs, necessary stairwells in physical structures pursuant to § 35(4) MBO must have walls and ceilings that remain space-enclosing and stable for a sufficient length of time. Depending on building class, they must ensure stability and the space barrier pursuant to the requirements of Sections A 2.1.3.2 and A 2.1.3.3; the walls must meet the requirements pertaining to inner fire walls as per Section A 2.1.7.

Necessary stairwells in walls or walls of rooms between necessary stairwells and external exits, openings to necessary corridors are only permissible if they have smoke-proof and self-closing barriers to prevent the spread of fire; the lock on the opening must be secured.

Door openings in walls of necessary stairwells to basements, to unconverted attic spaces, workshops, shops, store rooms – and similar rooms as well as to other rooms and utilisation units with a surface area of more than 200 m² must – regardless of the fire resistance of these walls – have durably fire-retardant, smoke-proof and self-closing barriers (fire protection barriers) to prevent the spread of fire and the passage of cold smoke as per DIN 18095-2:1991-03 must be prevented in the stairwell for a period of 10 minutes; the space barrier must be secured. The requirements under Section 2.1.7 also apply. Technical Rule A 2.2.1.2 must be observed to meet these requirements.

Openings in walls of necessary stairwells to necessary corridors may be floor-to-ceiling and a maximum of 2.5 m wide and must have smoke-proof and self-closing barriers (smoke barriers) to prevent the passage of cold smoke as per DIN 18095-2:1991-03 in the stairwell for a period of 10 minutes in the event of fire; the space barrier must be secured. The smoke barriers must meet the criteria of DIN 18095-1:1988-12. They are durably self-closing if the permanent functionality criteria of DIN 4102-18:1991-03 are met. A smoke barrier can be kept open if it has a device that immediately and safely closes the smoke barrier in the event of smoke (locking mechanism). This also applies if the necessary power supply is interrupted. To pre-emptively prevent the spread of smoke, closing may be activated with other additional safety equipment (e.g. fire alarm systems); the requirements under A 2.2.1.7 must also be observed. Technical Rule A 2.2.1.2 must be observed to meet these requirements.

Door openings in walls of necessary stairwells to housing units and to other rooms and utilisation units with a surface area of up to 200 m² must have sealed and self-closing barriers. This requirement is met with building components (doors) that ensure sealing when smoke is present in the stairwell, provided there are no pressure differences between the stairwell and the area to be closed off beyond those due to normal climate thermal lift and the smoke has not dropped to the bottom of the door. Doors are tightly sealed if they have a sturdy door panel and are fitted with a three-sided, permanently elastic seal on both frame and the door due to their form (lip/hose seal) and the sealing manner. The doors are durably self-closing if the permanent functionality criteria of DIN 4102-18:1991-03 are met. Technical Rule A 2.2.1.2 must be observed to meet these requirements.

A 2.1.12 Necessary corridors and open walkways

Depending on how they are used in the physical structure, the walls of necessary corridors pursuant to § 36(4)(1) MBO must, to achieve the protection aims, ensure the space barrier for a sufficient length of time in the event of fire, remain stable where necessary and meet the requirements of Sections A 2.1.3.2 and A 2.1.3.3.

[1] Under state laws

Necessary corridors in walls are only permissible for the use of necessary door openings. The doors must shut tightly as per § 36(4) sentence 4 through constructive measures on the doors to hinder the entry of smoke over a specific period of time in the event of fire in a utilisation unit or an adjoining utilisation unit. If a necessary corridor separates utilisation units, these doors must be kept closed. Doors are tightly sealed if they have a sturdy door panel and are fitted with a three-sided, permanently elastic seal on both frame and the door due to their form (lip/hose seal) and the sealing manner. For open doors or doors closed after burn-through, the spread of fire must be inhibited on the ceiling and wall surfaces of the necessary corridor so as not to hamper rescue and fire-fighting measures. Where ceilings and walls are made of combustible building materials, non-combustible cladding with sufficient thickness is required, e.g. in the form of a 12.5 mm thick gypsum plasterboard.

Where the walls of necessary corridors are made of fire-resistant glazing, the fire-resistant glazing requirements are met if during a fire pursuant to DIN 4102-13:1990-05, Section 6.1 the spread of fire and smoke and the passage of heat radiation is prevented over the minimum period of time and the criteria under DIN 4102-13:1990-05 are satisfied. To ensure that the prevention of spread of fire is not affected, barriers to necessary openings in fire-resistant glazing must, in derogation of § 36(4)(4), correspond to the fire resistance time of the fire-resistant glazing at a minimum; the requirements on fire resistance time also apply. The requirements under Section A 2.1.7 also apply, including in respect of keeping this fire protection barrier open. Technical Rule A 2.2.1.2 must be observed to meet these requirements.

To prevent the spread of smoke via necessary corridors and allow people to escape, necessary corridors pursuant to § 36(3) MBO must be divided with non-locking, smoke-proof and self-closing barriers (smoke barriers) in smoke compartments no more than 30 m long. The smoke barriers may be floor-to-ceiling and extend over the entire width of the corridor, have fixed side parts and skylights. The requirements for smoke barriers under Section A 2.1.12 also apply. Technical Rule A 2.2.1.2 must be observed to meet these requirements.

Where in derogation of § 67(1) MBO, necessary corridors in fire-retardant walls have transparent areas as fire-resistant glazing, the fire-resistant glazing requirements are met if during a fire pursuant to DIN 4102-13:1990-05, Section 6.1 the spread of fire and smoke and the passage of heat radiation is prevented over the minimum period of time and the criteria under DIN 4102-13:1990-05 are satisfied. They may only be installed in places where there are no concerns regarding the rescue of people and effective fire-fighting (e.g. as lightwells, where the lower edge of the fire-resistant glazing must be at least 1.8 m above the floor). To prevent the spread of fire, openings in this fire-resistant glazing are not permissible. Technical Rule A 2.2.1.2 must be observed to meet these requirements.

Air vent openings in walls of necessary corridors are only permitted in derogation of § 67(1) MBO if there are no concerns regarding the rescue of people and effective fire-fighting. Seals on these openings must have smoke detectors and prevent the passage of fire and smoke for at least a standard fire as per DIN 4102-2. Technical Rule A 2.2.1.2 must be observed to meet these requirements.

A 2.1.13 Lift shafts, lifts

Where lifts within buildings must have their own lift wells under § 39(1) MBO, the spread of fire to other storeys should be ensured for a sufficient period of time. The lift shaft walls must ensure the space barrier for a sufficient length of time in the event of fire to achieve the protection aims, remain stable where necessary and meet the requirements of Sections A 2.1.3.2 and A 2.1.3.3. Lift shaft walls of combustible building materials must have cladding on the side of the shaft of sufficient thickness to ensure that a fire does not spread to the surfaces of the lift shaft walls when the landing doors remain open or close after burn-through.

The lift shafts must be designed to ensure that fire and smoke cannot be transferred to other storeys. This requirement can only be met if the lift shafts are fire-resistant for a sufficient length of time and

a) the landing doors meet the following requirements:
   - they are verified in accordance with DIN 4102-5:1977-09 and classified as landing doors
   - they are installed in solid walls of masonry or concrete,

b) the lift cage is predominantly made of non-combustible building materials (this is the case if the load-bearing and stiffening parts of the lift cage are made of non-combustible building materials and the other parts of the lift cage (such as wall and ceiling cladding, flooring, ventilation and lighting covers) do not have more than 2.5 kg of combustible fuels, at least normally flammable building materials per m^2 of the inner lift cage area),

c) the doors are controlled so that they only stay open as long as is necessary to enter or leave the lift cage; two overlapping doors in closed position prevent fire from being transferred to the upper storey.

d) where several doors are positioned side by side, the doors are separated by fire-resistant components and are attached to these components, and

e) the lift shaft has an opening to remove smoke as per § 39(3)(1) MBO.

Technical Rule A 2.2.1.2 must be observed to meet these requirements.

[1] Under state laws

A 2.1.14 Conduits, service shafts and ducts

In physical structures, conduits, service shafts and ducts as per § 40 MBO may only pass through building components for sealing off areas for which a fire resistivity is stipulated if there is no danger of fire spread for a sufficiently long period of time, or other precautions are taken to prevent this. Technical Rule A 2.2.1.9 applies to conduits in escape routes and to the routing of conduits through space-enclosing components. Electrical circuit systems for necessary safety systems in physical structures pursuant to Section A 2.1.21 must be designed or separated by components so that the safety systems remain operational for a sufficient length of time in the event of fire; Technical Rule A 2.2.1.9 must be observed.

Where installations are routed in cavities of system floors in physical structures, Technical Rule A 2.2.1.10 must be observed.

Technical Rule A 2.2.1.2 must be observed to meet these requirements.

To protect other rooms against fire from electrical service rooms for transformers or substations, Technical Rule A 2.2.1.11 must be observed. Compliance with this Technical Rule also ensures that electrical installations maintain functionality for necessary safety systems.

A 2.1.15 Ventilation systems

Ventilation systems in physical structures must under § 41(1) MBO be operationally reliable and fireproof and may not impede the proper operation of combustion plants. To clarify these requirements for ventilation systems, the requirements under Technical Rule A 2.2.1.12 must be observed.

Technical Rule A 2.2.1.2 must be observed to meet these requirements.

A 2.1.16 Requirements for combustion plants, other heat generation and fuel supply installations

Furnaces and flues (combustion plants) and stationary combustion engines, combustion plants and combined heat and power plants, fuel cells and compressors in physical structures must under § 42 MBO be operationally reliable and fireproof; they may only be installed in rooms if no danger arises. Systems used to extract combustion gases must under § 42 MBO be installed in such a way that no danger or unreasonable inconvenience arises.
Technical Rules A 2.2.1.13 and A 2.2.1.2 must be observed to meet these requirements.

A 2.1.17 Lightning protection systems

Lightning protection systems under § 46 MBO should prevent the formation of fire in and on the physical structure and prevent the endangerment of people by lightning.

A 2.1.18 Physical structures used to store water-polluting materials and plastic secondary materials

If water-polluting materials are stored in physical structures, the requirements on the containment of extinguishing water under Technical Rule A 2.2.1.15 must be observed to protect the water from contaminated extinguishing water.

Where physical structures are used to store plastic secondary materials, the spread of fire must be prevented and effective fire-fighting enabled. Technical Rule A 2.2.1.16 must be observed.

A 2.1.19 Garages

To meet the basic requirements for physical structures used as garages, specific requirements under are set out under A 2.2.2.1.

A 2.1.20 Requirements for special constructions

Special requirements or simplifications to fire protection requirements of the MBO for standard buildings resulting from the specific type or use of the physical structures for the erection, modification, maintenance, operation and use pursuant to § 51 MBO, arise in the following special constructions under § 2(4) MBO

- Accommodation facilities,
- sales outlets,
- Meeting places,
- Schools,
- Utilisation units in which up to 12 people in need of care or with disabilities live
- High-rise buildings,
- Industrial buildings

in respect of planning and execution from the requirements under A 2.2.2.2 to A 2.2.2.8.

Note: Specific fire protection requirements or simplifications may also be laid down in a planning decision pursuant to § 67 MBO or in the planning permission for a special construction pursuant to § 64 MBO. Where the protection aims under § 14 MBO can be met in a way other than by means of Technical Rule A 2.2.1.2, the necessary technical information must be provided in the building documents.

For roofs of physical structures with wide extension, the relevant requirements under A 2.2.2.8 must be observed where required in respect of preventing the spread of fire in the event of fire from the inside out. Roofs are suitable if they do not fail in the event of fire and meet the criteria as per DIN 18234-1:2003-09.

[1] Under state laws

Electrical circuit systems needed to operate bed lifts in hospitals and other physical structures with a similar purpose must be designed or separated by components so that the safety systems remain operational for a sufficient length of time in the event of fire.

A 2.1.21 Requirements for safety equipment and systems

A 2.1.21.1 General

For special constructions in particular, safety equipment and systems may be required under § 51 MBO in addition to structural measures, according to the type or use of the physical structure to meet the protection aims. Safety equipment and systems may also be required under a planning decision pursuant to § 67 MBO for physical structures that are not special constructions under § 2(4) MBO (standard buildings). Safety equipment and systems must be effective and operationally reliable – even where several devices and systems are working together – and must meet the requirements set out in the following sections.

Note: Where the protection aims under § 14 MBO cannot be met as set out in Technical Rule A 2.2.1.2, the necessary technical information must be provided in the building documents to demonstrate that the protection aims have been met.

A 2.1.21.2 Smoke extractors and smoke extraction systems

Where smoke extractors and smoke extraction systems are required for rooms, effective fire-fighting by the fire service should be supported by smoke ventilation. Smoke extractors in necessary stairwells of meeting places and sales outlets in accordance with the specimen provisions must be capable at least of being activated by hand. Smoke extraction systems must be capable of being activated by hand and automatically. Smoke extraction systems may be required to be natural smoke extraction systems or mechanical smoke extraction systems.

Mechanical smoke extraction systems must be able to withstand the temperatures of the combustion gas to be extracted for a sufficient length of time.

Smoke extractors and natural smoke extractors must be chosen and used depending on their location in the physical structure, the requisite aerodynamic opening area and the location of the physical structure in respect of functionality and the effects inter alia of wind, snow and of ambient temperatures. This must be shown in the fire protection certificate. Technical Rule A 2.2.1.2 and the performance requirements apply to use.

Mechanical smoke extractors must be chosen and used depending on their location in the physical structure and the requisite airflow in respect of temperature resistance. Technical Rule A 2.2.1.2 and the specified performance requirements apply to use.

Smoke extraction systems consist at a minimum of operating and activation devices, the smoke extractors and, for mechanical smoke extraction systems, smoke extraction ducts including necessary barriers (smoke extraction dampers) to control smoke removal and airflows. The necessary air intake must be present to operate the smoke extraction systems; barriers to air intake openings must be capable of being easily opened by the fire service. For mechanical smoke extraction systems, air intake barriers must open no later than the same time as the mechanical smoke extractors starts up.

Smoke extraction ducts must be sealed and heat-resistant so that smoke from the inside cannot escape into other areas of the physical structure outside the fire area; they must be designed and positioned so that temperature increases on the outside of the conduits do not lead to fire formation outside the fire area and no significant cross-section reductions occur. The same applies to ducts and shafts used to extract smoke provided by natural smoke extraction systems.

Automatic smoke extraction systems must have automatic fire detection and activation devices; they must also be capable of being activated by automatic fire alarm systems.

All necessary data on the position of the smoke extractors and the arrangement of smoke extraction systems must be stated in the fire protection certificate.

Smoke extraction systems must have a power supply and remain operationally reliable for a sufficient length of time if the general power supply fails (emergency power supply).

Electrical circuit systems needed to operate pressure boosters must be designed or separated by components so that the safety systems remain operational for a sufficient length of time in the event of fire.

A 2.1.21.3 Heat extractors

Where heat extractors are required, spread of a fully developed fire to specific areas of a physical structure must be counteracted to prevent flammable parts of the physical structures from catching fire outside the actual fire area by hot combustion gases. For existing components in the fire area, thermal effects must be reduced so that stability or the space barrier remains intact in the event of fire. In this way, effective fire-fighting can also be supported.

[1] Under state laws

Requisite heat extractors must be chosen and used depending on their location in the physical structure, the prescribed geometric dimensions, the requisite geometric opening area and the location of the physical structure in respect of functionality and the effects inter alia of wind, snow and of ambient temperatures. This must be shown in the fire protection certificate. Technical Rule A 2.2.1.2 and the performance requirements apply to use. All necessary data on the position of the heat extractors must be stated in the fire protection certificate.

A 2.1.21.4 Pressure ventilation systems (smoke extraction systems)

Pressure ventilation systems are required to keep escape routes that are the only structural escape route (safety stairs) and lift shafts of requisite fire service lifts free of smoke so that people can be rescued and effective fire-fighting can be supported. The arrangement of pressure ventilation systems is only permissible if rooms are located before the escape route or lift shaft (anterooms) and these rooms are detected by the pressure ventilation system. The walls and ceilings of the anterooms must be non-combustible and must in the event of fire remain space-enclosing for a sufficient length of time. The barriers to necessary openings in anterooms must remain space-enclosing and smoke-proof for a sufficient length of time. The anterooms must be accessible only by necessary corridors.

The pressure ventilation systems must prevent the entry of smoke in the escape route or lift shaft and their anterooms for a sufficient length of time, even when the doors to the rooms are open.

The operation of the pressure ventilation system must not result in doors in escape routes no longer being able to be opened due to high pressure differences. Sufficient overflow openings or devices must be provided for pressure ventilation systems. Pressure ventilation systems must be planned and operated so that the failure of a ventilation unit does not lead to the failure of pressure ventilation.

Pressure ventilation systems must automatically activate in the event of fire. They must also be capable of being activated by automatic fire alarm systems. The necessary pressure must build up immediately after activation.

Pressure ventilation systems consist of at least automatic fire detection and activation devices, ventilation units, ventilation pipes, an airflow control system and the necessary outflow devices.

All necessary data for pressure ventilation systems must be stated in the fire protection certificate.

Pressure ventilation systems must have a power supply and remain operationally reliable for a sufficient length of time if the general power supply fails (emergency power supply).

Electrical circuit systems needed to operate pressure boosters must be designed or separated by components so that the safety systems remain operational for a sufficient length of time in the event of fire.

A 2.1.21.5 Fire-fighting equipment

Fire-fighting equipment must restrict the spread of fire and support effective fire-fighting operations.

Fire-fighting equipment may be required as automatic (self-actuated) semi-stationary or water spray systems, wall hydrant systems for the fire service (type F) and dry fire extinguishing pipe systems.

Fire-fighting equipment must be planned and erected according to the space-defining structure of the physical structure and existing building materials and burning material, their distribution and arrangement in the room, their burn-up behaviour and with regard to the fire detection and activation devices, suitable extinguishing agents, quantities of extinguishing agents and effective work range for the extinguishing agents. Where necessary, pressure ventilation systems must be installed.

Automatic (self-actuating) fire-fighting equipment, wall hydrant systems for the fire service (type F) and dry fire extinguishing pipe systems must be positioned on all storeys around the entire physical structure, unless they are permitted to be only in individual fire compartments. Fire-fighting equipment used as semi-stationary systems or water spray systems need only be positioned in parts of the physical structure.

In the case of automatic (self-actuating) activation, a fire alarm must automatically sound via a suitable fire alarm device at the local fire service control centre, unless otherwise stipulated by the building inspectorate. Automatic (self-actuating) fire-fighting equipment that uses technical gases as extinguishing agents may only be activated after fire detection if the user has been alerted and has sufficient time to leave the affected area (room); fire alarm forwarding remains unaffected.

For sprinkler systems used as automatic (self-actuating) fire-fighting equipment, the technical rules for class 1 in VdS CEA 4001 or other comparable recognised rules of the trade must be taken into account.

Automatic (self-actuating) fire-fighting equipment or parts thereof must have a power supply and remain operationally reliable for a sufficient length of time if the general power supply fails (emergency power supply).

Electrical circuit systems needed to operate fire-fighting equipment or parts thereof must be designed or separated by components so that the safety systems remain operational for a sufficient length of time in the event of fire.

[1] Under state laws

Draft

All necessary data must be stated in the fire protection certificate.

A 2.1.21.6 Fire alarm systems

Fire alarm systems should immediately issue an alert for incipient fires so that effective fire-fighting operations can be supported. Fire alarm systems consist at a minimum of fire alarms (e.g. smoke alarms, heat detectors, flame detectors, manual call points), equipment for transmitting the fire alarm within the physical structure, a fire alarm control panel and the transmission equipment for alerting fire-fighting teams. Unless otherwise stipulated by the building inspectorate, the fire alarm must be immediately forwarded to the local fire service control centre via the alarm transmission device. Automatic fire alarm systems must have automatic fire alarms and transmission devices. Fire alarm systems may be required to be planned and operated in such a way that technical false alarms are avoided. Fire alarm systems may have other transmission devices if other safety systems must be automatically activated or deactivated to meet the protection aims.

Fire alarm systems or individual components must have a power supply and remain operationally reliable for a sufficient length of time if the general power supply fails (emergency power supply).

Electrical circuit systems needed to operate pressure boosters must be designed or separated by components so that the safety systems remain operational for a sufficient length of time in the event of fire.

All necessary data must be stated in the fire protection certificate.

A 2.1.21.7 Alarm equipment and alarm systems

Alarm equipment and alarm systems are used to provide early warnings to people in the physical structures of danger. They can be manually or automatically activated. The information can be provided acoustically or visually (signal); combinations of these and different signal sequences depending on the type of danger are permissible. The information may also be transmitted only to a limited number of people in the physical structure.

For these equipment and systems, therefore, additional instructions must always be provided in written or graphic form indicating how people in the physical structure should behave depending on the signal or signal sequence. The instructions must be clearly affixed in all areas of the physical structure. If only a limited number of people are to receive an alert, the instructions and notices may be restricted to this group of people.

This will ensure that people can make an early escape or that a specific group of people can start rescuing other people or that a physical structure is evacuated according to a specific pattern (evacuation concept).

Alarm equipment consists of at least one manual operating or activation station for issuing signals and one signal generator.

Alarm systems consist of at least manual operating or activation stations, the equipment for transmitting the signals in various areas to the people or to specific people in the physical structure the signal generators and, where different signal sequences are required, a control unit for the different signal sequences. Where automatic alarm systems are required, the necessary automatic warning devices, their automatic transmission devices, a device for assessing warnings and an automatic activation device for the signal generator must be present. Alarm systems may also be activated by a fire alarm system in the event of fire.

Alarm equipment and systems or individual components must have a power supply and remain operationally reliable for a sufficient length of time if the general power supply fails (emergency power supply).

Electrical circuit systems needed to operate alarm equipment and systems must be designed or separated by components so that the safety systems remain operational for a sufficient length of time in the event of fire.

All necessary data must be stated in the fire protection certificate.

A 2.1.21.8 Fire service lifts

Fire service lifts are used in particular in very high physical structures to support effective fire-fighting operations. Fire service lifts must remain usable by the fire service in the event of fire.

Therefore, no other lifts may be located in fire service lift shafts. Fire service lift shafts in conjunction with landing doors must remain safely operable for a sufficient length of time in the event of fire. Only the necessary technical equipment and systems required to operate the fire service lift may be located in lift shafts. Fire service lifts can only be accessible via an anteroom. The walls and ceilings of the anterooms must remain space-enclosing and non-combustible for a sufficient length of time in the event of fire. The barriers to necessary openings in anterooms must remain space-enclosing and smoke-proof for a sufficient length of time. The anterooms must be accessible only by necessary corridors. To avoid the lift shafts being affected by smoke, the anterooms and lift shafts must be kept free of smoke in the event of fire using pressure ventilation systems. Fire service lifts must have automatic fire detection devices which can be used to shut down lifts outside the fire area in the event of fire (fire control system) and can only be started up

[1] Under state laws

again by the fire service (fire service circuit). The fire control system may be automatically activated by an automatic fire alarm system.

Lifts may only be used to transport people and goods if there is no fire.

Fire service lifts must have a power supply and remain operationally reliable for a sufficient length of time if the general power supply fails (emergency power supply).

Electrical circuit systems needed to operate pressure boosters must be designed or separated by components so that the safety systems remain operational for a sufficient length of time in the event of fire.

All necessary data must be stated in the fire protection certificate.

A 2.1.21.9 Safety lighting

If the general power supply fails, safety lighting should provide sufficient minimum lighting in escape routes, in rooms and for necessary safety signs so that people can evacuate the physical structure to the public thoroughfare and, where applicable, work processes leading to danger can be securely locked. Safety lighting must be positioned according to the type and use of the physical structure and may also be required in parts of the structure only. It consists at a minimum of a power supply and safety lights. Unless otherwise allowed (standby mode), safety lighting must also be operated by the general power supply. To avoid danger, standby mode for safety lighting must be operational without delay.

Safety lighting must have a power supply and remain operationally reliable for a sufficient length of time if the general power supply fails (emergency power supply).

Electrical circuit systems needed to operate safety lighting must be designed or separated by components so that the safety systems remain operational for a sufficient length of time in the event of fire.

All necessary data must be stated in the fire protection certificate.

A 2.1.21.10 CO warning systems

Where quantities of carbon monoxide (CO) dangerous to people could arise while the physical structure is in used, the systems must reliably detect these and warn people so that they can take specific measures (e.g. stop engines) and immediately evacuate the physical structure or affected part thereof; they may also be used to operate ventilation systems in the affected area of the physical structure to reduce the CO content in the air. CO warning systems consist at a minimum of an automatic measuring device, an automatic device for transmitting the measuring signal, an evaluation and control system and devices to issue automatic visual and acoustic signals to people in the affected area of the physical structure.

CO warning systems must have a power supply and remain operationally reliable for a sufficient length of time if the general power supply fails (emergency power supply).

All necessary data must be stated in the building documents.

A 2.1.21.11 Emergency power supply

An emergency power supply is an electrical system, including power supply or electricity storage, used to supply power to other safety equipment and systems so that they can continue to be used for a specific period of time if the general power supply fails, where required for the safety equipment or system.

The emergency power supply consists of at least one power source sufficient to ensure continued operation (safety power set, batteries) in the physical structure and related electrical circuit systems to supply other safety equipment and systems.

A sufficient power source is present if in addition to the connection to the public supply network another connection to another independent public supply network for the physical structure; connections from adjoining physical structures are generally not independent public supply networks.

All necessary data must be stated in the fire protection certificate.

A 2.1.21.12 Indoor radio systems for the fire service

Indoor radio systems for the fire service are used to support effective fire-fighting operations. The systems support radio communications between fire service crews in the physical structure and with fire service crews present immediately outside the physical structure during operations, if this is not sufficiently possible due to the spatial configuration, dimensions or because the properties of the physical structure inhibit radio communication using fire service radio communication devices. They consist at a minimum of sending, receiving and transmission equipment.

Indoor radio systems must have a power supply and remain operationally reliable for a sufficient length of time if the general power supply fails (emergency power supply).

[1] Under state laws

Electrical circuit systems needed to operate pressure boosters must be designed or separated by components so that the safety systems remain operational for a sufficient length of time in the event of fire.

All necessary data must be stated in the fire protection certificate.

A 2.1.21.13 Pressure ventilation systems for extinguishing water supply

Pressure ventilation systems for extinguishing water supply are used to support effective fire-fighting operations in the physical structure. Pressure ventilation systems for the physical structure ensure, independently of the general water supply, that the corresponding operating systems are available using extinguishing water under A 2.1.21.5 at the necessary operating pressure for the entire provisioning time and the necessary quantities of extinguishing water can be taken or distributed.

Pressure ventilation systems consist of at least a pressure generation unit, a sufficiently large storage tank for the extinguishing water, an associated wiring system, a control and regulation system and power supply equipment to boost pressure.

Pressure boosters must have a power supply and remain operationally reliable for a sufficient length of time if the general power supply fails (emergency power supply).

Electrical circuit systems needed to operate pressure boosters must be designed or separated by components so that the safety systems remain operational for a sufficient length of time in the event of fire.

All necessary data must be stated in the fire protection certificate.

A 2.1.21.14 Fire control systems for lifts

Fire control systems must ensure that when a fire is detected the lift and the people inside can no longer be transported to the storey affected by fire and that the people leave the lift at another storey so that they can escape. Furthermore, it must be ensured that the lift shuts down afterwards.

Fire control systems consist at a minimum of automatic fire alarms on each storey, equipment for transmitting the fire alarm and the evaluation and control system for the lift. The fire control system may also be automatically activated by an automatic fire alarm system.

Electrical circuit systems needed to operate passenger lifts with a fire control system must be designed or separated by components so that the safety systems remain operational for a sufficient length of time in the event of fire.

A 2.1.21.15 Lightning protection systems to protect safety equipment and systems inside the physical structure

Lightning protection systems are used to protect safety equipment and systems inside physical structures to ensure the rescue of people and support effective fire-fighting operations. They must protect against the effects of lightning currents and flash voltage on installations and on electrical and electronic parts of the other equipment and systems in the physical structure in the event of a direct or indirect lightning strike. Measures to counteract over-voltage (external and internal lightning protection) and dangerous sparking must be taken.

All necessary data must be stated in the fire protection certificate.

[1] Under state laws

A.2.2 Technical requirements in respect of planning, design and execution and technical requirements for building components pursuant to § 85a(2)

Identification/item No.	Technical requirements	Technical rules/edition	Further measures pursuant to § 85a(3)
1	2	3	4
A 2.2.1 Planning, design and execution			
A 2.2.1.1	Fire service areas	Specimen guidelines on fire service areas: 2007-02, amended 2009-10	Appendix A 2.2.1.1/1
A 2.2.1.2	Construction products and designs	Technical Rule - building inspectorate requirements, classification in classes, use of construction products, use of designs: 2016-06[6] (Annex)	
A 2.2.1.3	Classified building materials and building components, execution rules	DIN 4102 - 4: 2016-05 Fire-resistant properties of construction materials and components - Part 4: Synopsis and application of classified building materials, components and special components	Appendix A 2.2.1.3/1
A 2.2.1.4	Highly fire-retardant components in timber construction	Specimen guideline on fire prevention construction requirements for highly fire-retardant components in timber construction – M-HFHHolzR: 2004-07	
A 2.2.1.5	Thermal insulation systems	Technical Rule - WDVS of EPS, Socket fire test procedure: 2016-06 (Annex)	
A 2.2.1.6	Empty		
A.2.2.1.7	Rear-ventilated external wall cladding	Technical Rule - Rear-ventilated external wall cladding: 2016-06 (Annex)	
A 2.2.1.8	Locking mechanisms	Technical Rule – Requirements for locking mechanisms: 2016-06 (Annex)	
A.2.2.1.9	Conduits	Specimen guideline on fire protection requirements pertaining to conduits (Specimen conduit guideline – MLAR): 2005-11	
A 2.2.1.10	System floors	Specimen guideline on fire protection requirements pertaining to system floors (MSysBöR): 2005-09	
A 2.2.1.11	Electrical service rooms	Specimen Regulation on the building of service rooms for electrical installations (EltBauVO):2009-01	
A 2.2.1.12	Ventilating machinery	Specimen guideline on fire protection requirements pertaining to ventilation systems (Specimen ventilation system guideline M-LüAR): 2005-09, amended 2015-11	
A 2.2.1.13	Combustion plants, other heat generation and fuel supply installations	Specimen Combustion Plants Order (MFeuV):2007-09 (amended 2010-02)	
A 2.2.1.14	Technical fittings for buildings	Empty	
A 2.2.1.15	Containment systems for extinguishing water	Guideline on the design of containment systems for extinguishing water when water-polluting substances are stored (LöRüRL): 1992-08	

[6] § 85a(1)(3) MBO [Model Building Regulation] does not apply to provisions in this Technical Building Regulation insofar as it relates to classifications associated with building inspectorate requirements; this also applies to sections of the application and execution conditions to be met as minimum conditions for classification

Draft

Identification/item No.	Technical requirements	Technical rules/edition	Further measures pursuant to § 85a(3)
1	2	3	4
A 2.2.1.16	Storage of plastic secondary materials	Specimen guideline on fire protection during the storage of plastic secondary materials (Specimen plastic storage guideline – MKLR): 1996-06	
A 2.2.2. Garages and special constructions § 85a(1) sentence 3 MBO[1] does not apply to Technical Building Regulations under Section A 2.2.2.			
A 2.2.2.1	Garages[1]	Specimen regulation on the construction and operation of garages: 1993-05, amended 2008-05	
A 2.2.2.2	Accommodation facilities[1]	Specimen regulation on the construction and operation of accommodation facilities: 2000-12, amended 2014-05	
A 2.2.2.3	Sales outlets[1]	Specimen regulation on the construction and operation of sales outlets: 1995-09, amended 2014-07	
A 2.2.2.4	Meeting places[1]	Specimen regulation on the construction and operation of meeting places: 2005-06, amended 2014-07	
A 2.2.2.5	Schools[1]	Specimen guideline on building inspectorate requirements pertaining to schools: 2009-04	
A 2.2.2.6	Residential accommodation for people in need of care or with disabilities[1]	Specimen guideline for building inspectorate requirements for residential accommodation for people in need of care or with disabilities: 2012-05	
A 2.2.2.7	High-rise buildings[1]	Specimen guideline on the construction and operation of high-rise buildings: 2008-04, amended 2012-02	
A 2.2.2.8	Industrial buildings[1]	Specimen guideline on structural fire protection in industrial buildings (Muster-Industriebaurichtlinie [Specimen Industrial Buildings Directive] MIndBauRL)): 2014-07	

Appendix A 2.2.1.1/1

Re the Specimen guideline on fire service areas

The following must be observed when applying the technical rule:

1 Re Section 1
Access routes, installation areas and movement areas must be fortified at least in line with road building class VI (Richtlinie für Standardisierung des Oberbaues von Verkehrsflächen [Guideline on the standardisation of road beds for road surfaces] – RStO 01).
Instead of DIN 1055-3:2006-03, DIN EN 1991-1-1:2010-12 in conjunction with DIN EN 1991-1-1/NA:2010-12 shall apply.

2 Signs
2.1 Signs for access routes and thoroughfares are marked "Feuerwehrzufahrt" [fire service access], signs for installation areas or movement areas are marked "Flächen für die Feuerwehr" [fire service areas].
Signs for fire service areas must be in line with DIN 4066; signs for "Feuerwehrzufahrt" [fire service access] must be at least W/H = 594/210 mm and be visible from the public thoroughfare.
Fire service areas must have demarcation that is clearly visible at all times.
2.2 Under § 12(1)(8) StVO stopping in front of or in fire service access routes is not permitted if these access routes are officially marked.

[1] Under state laws

Draft

If stopping must be prohibited under StVO in the public thoroughfare in the fire service access area, the sign must be marked "Feuerwehrzufahrt" by the competent authority (official sign).
Instead of the official sign "Feuerwehrzufahrt" the competent authority may order the installation of traffic sign 283 (stopping prohibited) under the StVO with the additional sign "Feuerwehrzufahrt" (protection area as defined in § 45(1)(2)(5) StVO).

Appendix A 2.2.1.3/1
The following is to be observed when applying the technical rule:

1 Re Section 4.2

Where specific fire protection requirements and fire protection values of the building material class apply, coatings applied subsequently to building components up to a thickness of 0.5 mm remain disregarded, where the coatings are fully applied without hollow spaces on a non-combustible background.

2 Re Section 11.4

Transparent sections of combustible building materials in accordance with § 32(4)(1)[1] MBO are permitted in roofings that are resistant to flying sparks and radiating heat in accordance with § 32(1) MBO[1] (rigid roofings), unless otherwise stipulated in other provisions or requirements, if:

- the sum of the sections does not exceed 30 % of the roof area,
- the sections are at least 5 m from the fire walls of directly adjoining higher buildings or sections of buildings,
- the sections are clerestory strips of maximum 2 m wide and 20 m long, are at least 2 m from each other and from the roof edges, or
- are dome lights with an area of not more than 6 m² each, are at least 1 m from each other and from the roof edges and are at least 2 m from clerestory strips made of combustible building materials.

3 Re Section 11.4

Roof covering products/materials that meet the relevant European technical specifications (harmonised European standard or European technical approval) and satisfy the additional conditions on adjoining layers qualify as roofings that withstand flying sparks and radiating heat.

Combination of roof covering products (or materials) that can withstand flying sparks and radiating heat pursuant to Commission Decision 2000/553/EC, published in the Official Journal of the European Communities L 235/19, which can be assumed without testing to meet the requirements; the additional conditions regarding adjoining layers must also be met.

A 3 Hygiene, health and preservation of the environment

A 3.1 General

Under § 3 and §13 MBO[1] physical structures must be positioned, erected, modified and maintained so that public health and safety – particularly life, health and natural resources – are not endangered and so that no dangers or unreasonable inconveniences arise due to plant and animal parasites and other chemical, physical or biological effects.

To demonstrate compliance with these requirements, physical structures must be designed and executed as a whole and in their separate parts so that the requirements pertaining to health protection and the protection of soil and water under Section A 3.2 are met.

A 3.2 Technical requirements in respect of the planning, design and execution of building works and parts thereof pursuant to § 85a(2) MBO[1]

The building requirements on reducing harmful emissions in accommodation areas pursuant to item number A 3.2.1 and A 3.2.2 and to ensure the environmental impact of external building components pursuant to item number A 3.2.3 are set out in the regulations. They must be adhered to. Where constructive measures are envisaged for the affected areas instead (e.g. surface layers, casings) their protective effect must be demonstrated.

[1] Under state laws

Identification/item No.	Planning, design and execution requirements pursuant to § 85A(2) MBO[1]	Title/edition	Further measures pursuant to § 85a(2) MBO[1]
1	2	3	4
A 3.2.1	Health protection requirements for physical structures	ABG (June 2016) - Health protection requirements for physical structures (Annex)	
A 3.2.2	Textile flooring	TRTB (June 2016) - Technical Rule, textile flooring (Annex)	
A 3.2.3	Requirement for physical structures regarding effects on soil and water	ABuG (June 2016) - Requirement for physical structures regarding effects on soil and water (Annex)	
A 3.2.4	Appraisal and refurbishment of building materials and components in structures contaminated with PCBs [polychlorinated biphenyls]	Guideline on the appraisal and refurbishment of building materials and components in structures contaminated with PCBs, September 1994 edition, Sections 1, 2, 3, 4.1, 4.2, 5.1, 5.2, 5.4 and 6	Appendix A 3.2/1
A 3.2.5	Appraisal and refurbishment of building materials and components in structures contaminated with asbestos products	Guideline on the appraisal and refurbishment of building materials and components in structures contaminated with asbestos products, January 1996 edition	Appendix A 3.2/2
A 3.2.6	Ventilation systems in windowless kitchens, bathrooms and toilets in housing units	Building inspection guidelines for installing ventilation systems in windowless kitchens, bathrooms and toilets in housing units, April 2009 edition	
A 3.2.7	Appraisal and refurbishment of building materials and components in structures contaminated with pentachlorophenol (PCPs)	Guideline on the appraisal and refurbishment of building materials and components in structures contaminated with pentachlorophenols (PCPs), October 1996 edition Sections 1, 2, 3, 4, 5, 6.1 and 6.2	
A 3.2.8	Limiting formaldehyde emissions when using urea formaldehyde resin in-situ foam	ETB directive on limiting formaldehyde emissions when using urea formaldehyde resin in-situ foam, April 1985 edition	

Appendix A 3.2/1

Regarding the PCB Guideline

The following also applies:

1 To ward off possible dangers to life or health, remediation measures shall be undertaken in rooms which are used on a permanent basis if the concentration to be anticipated in the inside air – irrespective of the daily length

[1] Under state laws

Draft

of stay – exceeds 3 000 ng PCB/m³ of air when averaged over the year. The final sentence in Chapter 3 of the guideline is deleted.

2 The September 1994 version of the guideline shall otherwise apply to the full extent as long as the primary sources contains PCBs involve just PCB sources such as sealants which are not like dioxins. If, however, as regards the PCB primary sources, consideration must be given to just or also dioxin-like PCB sources such as floor slabs, coatings and those sources of PCBs which cannot be reliably classified, the concentration of PCB 118 in the inside air also has to be determined if the total concentration of PCBs exceeds 1 000 ng PCB / m³ of air. If, in this regard, the concentration in the inside air exceeds 10 ng PCB 118 / m³ of air, measures designed to reduce exposure must be carried out immediately in accordance with Sections 3 and 4 of the Guideline concerned with reducing the concentration of PCBs in inside air. Where concentrations in the inside air are equal to or less than 10 ng PCB 118 / m³ of air, it is recommended at least reviewing the ventilating characteristics, and improving them where necessary, depending on the level of contamination.

3 If structural works containing products which contain PCBs are to be demolished, these products must be removed from the structural work prior to demolition work starting.

Note:
Reference is also made to the fact that the remediation guideline value of 300 ng PCB / m³ of air which is mentioned in Section 5.3 of the guideline represents a value from the area covered by precautions which cannot be delimited precisely and should therefore be achieved depending on the magnitude. Measures designed to reduce the concentration of PCBs in the inside air are recommended depending on the extent to which the remediation guideline value is exceeded, while observing proportionality.

Appendix A 3.2/2

Re the Asbestos Directive

The following must be observed when applying the technical rule:

1 Monitoring the success of refurbishment in line with Section 4.3 by measuring the concentration of asbestos fibres in the indoor air under Section 5 is not required in the case of refurbishment procedures are not required to close off the work area under this Directive.
2 Section 4.3.3 "Coatings (Method 2)" shall not apply.

A 4 Safety and accessibility in use

A 4.1 General

Under § 3 MBO[1], physical structures must be positioned, erected, modified and maintained in such a way that public safety and order, in particular, human life, health and natural resources, are not endangered.

The requirements on safety in use and accessibility are implemented in particular pursuant to §§ 16 and 50 MBO[1] if physical structures as a whole and in their separate parts are designed and executed in line with the technical rules on safety and accessibility pursuant to Section A 4.2.

A 4.2 Technical requirements in respect of the planning, design and execution of building works and parts thereof pursuant to § 85a(2) MBO[1]

Identification/item No.	Planning, design and execution requirements pursuant to § 85a(2) MBO[1]	Title/edition	Further measures pursuant to § 85a(2) MBO[1]
1	2	3	4
A 4.2.1	Stairs in buildings	DIN 18065:2016-03 - Stairs in buildings - Definitions, measurement rules, main dimensions	Appendix A 4.2/1
A 4.2.2	Accessible built environment	DIN 18040 - Accessible built environment – Design principles	
	Publicly accessible buildings	- 1:2010-10 - Publicly accessible buildings	Appendix A 4.2/3

[1] Under state laws

Identification/item No.	Planning, design and execution requirements pursuant to § 85a(2) MBO[1]	Title/edition	Further measures pursuant to § 85a(2) MBO[1]
1	2	3	4
	Housing units	- 2:2011-09 - Housing units	Appendix A 4.2/4

Appendix A 4.2/1

Re DIN 18065

1 The use of stairs in building class 1 and 2 residential buildings and housing units is excluded from the insertion.

2 Building inspectorate requirements regarding the installation of stairlifts in stairwells of necessary stairs in existing buildings:
The retrofitting of a stairlift in a stairwell must not adversely affect the operation of the necessary stairs as part of the primary escape route and the safety of the stairs. A stairlift may be retrofitted if the following criteria are met:

1. The stairs only open onto housing units and/or comparable uses.
2. The flight width for the stairs must not be considerably below the 100 cm minimum flight width due to the construction; lowering of the clearance gauge (see Figure A.7) by 20 cm maximum in width and 50 cm maximum in height is acceptable if the flight of stairs (see point 3.6) or the passage area (see point 8) is not changed. It must be possible to use a handrail for its intended purpose.
3. If a stairlift is routed over several storeys, there must be a sufficiently large waiting area on each storey to hold one person when the stairlift is in operation. This is not required if 60 cm remaining width on the stairs is ensured besides the lift in operation.
4. Unused lifts must be in park position that does not restrict the flight of stairs. In the event of a fault, the stairlift must be capable of being easily placed by hand into the park position.
5. The stairlift seat must be folded up into and out of the park position when unladen. Besides the folded up seat there must be 60 cm remaining width on the stairs.
6. The stairlift must be secured against misuse.
7. The stairlift must consist of non-combustible materials insofar as possible.

3 For necessary stairs in an existing building, the retrofitting of a second handrail must not be more than 10 cm below the usable minimum flight width. This exemption relates only to stairs with a minimum flight width of 100 cm in accordance with DIN 18065 specifications. Different specifications and requirements pertaining to effective width remain unaffected.

Appendix A 4.2/3

Re DIN 18040-1

The insertion relates to physical structures or parts thereof that must be barrier-free under § 50(2) MBO[1].
The following is to be observed when applying the Technical Building Regulation:

1 Section 4.3.7 is not covered by the insertion. The instructions and examples mentioned in Section 4.4 and 4.7 may be taken into account in individual cases.
2 Section 4.3.6 must only be applied to required stairwells.
3 At least one lavatory for users must correspond to Section 5.3.3; Section 5.3.3 sentence 1 shall not apply.
4 At least 1% but at least one of the necessary parking spaces for users must correspond to Section 4.2.2 sentences 1 and 2.
5 At least 1 % but at least one of the visitor spaces in meeting rooms with fixed rows of chairs must correspond to Section 5.2.1; they may be offset against the places required for wheelchair users under § 10(7) MVStättV[1].

Appendix A 4.2/4

Re DIN 18040-2

The insertion relates to

- housing units that must be barrier-free under § 50(1) MBO[1], and
- housing units and lifts that must under § 39(4) sentence 3 MBO[1] be accessible without steps.
  accommodation spaces including related sanitary facilities that must be barrier-free under § 11 MBeVO[1].

[1] Under state laws

Draft

The following is to be observed when applying the Technical Building Regulation:

1 Sections 4.3.6 and 4.4 and all requirements marked R are not covered by the insertion.
2 For housing units under § 50(1) MBO[1] it is sufficient if a window in a living area corresponds to Section 5.3.2 sentence 2.
3 For accessibility without steps under § 39(4) MBO[1] it is sufficient if entries correspond to Section 4.3.3.2 Table 1 row 1, movement areas around doors correspond to Section 4.3.3.4 and ramps correspond to Section 4.3.7.
4 For accommodation spaces including sanitary facilities that must meet the basic requirements for barrier-free usable housing units, Section 5 without requirements marked R applies.
5 For accommodation spaces including sanitary facilities that must be barrier-free and freely accessible with a wheelchair, Section 5 without requirements marked R applies. In addition, toilet bowls must be accessible on both sides; where there is more than one accommodation space that is freely accessible with a wheelchair, the access sides for toilet bowls may be alternately provided on the right- or left-hand side. An emergency call system must be provided near the toilet bowl. In derogation of Section 5.5.1, supports and/or handrails must be provided near the toilet bowl and around the area during construction **–** these can be assembled where necessary.

A 5 Sound insulation

A 5.1 General

Under § 3 and § 15(2) MBO[1] physical structures must be positioned, erected, modified and maintained to have sound insulation in accordance with their use.

To meet this requirement, the technical rules on sound insulation under Section A 5.2 must be observed.

A 5.2 Technical requirements in respect of the planning, design and execution of building works and parts thereof pursuant to § 85a(2) MBO[1]

Identification/item No.	Planning, design and execution requirements pursuant to § 85a(2) MBO[1]	Title/edition	Further measures pursuant to § 85a(2) MBO[1]
1	2	3	4
A 5.2.1	Sound insulation in buildings	DIN 4109 - Sound insulation in buildings	
		- 1:2016-07 - Part 1: Minimum requirements	Appendix A 5.2/1
		- 2:2016-07 - Part 2: Mathematical proof of compliance with the requirements	Appendix A 5.2/2
		- 31 to -36:2016-07- Parts 31 to 36: Data for mathematical proof of sound insulation (component catalogue)	Annexes A 5.2.3, A 5.2/4 and A 5.2/5

Appendix A 5.2/1

Re DIN 4109-1

1 Re Section 7.2, Table 7, footnote b:
The requirements shall be specified by the building inspectorate in individual cases.

2 Re Sections 7, 8 and 9:
For physical structures classified under Table **9**, rows 3 and 4, compliance with the required sound pressure level must be demonstrated by submitting measurement results. The same applies to compliance with the required sound insulation value for building components under Table 8 and for external building components on which the requirements under Table 7, columns 3 and 4 are imposed, provided the rated sound insulation value is $R'_{w,res}$ > 50 dB. These measurements must be performed in accordance with DIN 4109-4:2016-07 by building acoustics inspection body that are either recognised under § 24(1)(1) MBO[1] or are listed in another directory for **"**recognised sound insulation inspection bodies**"** at the VMPA, the association of material testing institutions [7].

3 The informative Annexes A and B do not apply.

7 Verband der Materialprüfungsanstalten [Association of material testing institutions] (VMPA) e. V. Berlin, Littenstraße 10, 10179 Berlin (www.vmpa.de)

1 Under state laws

Draft

Appendix A 5.2/2

Re DIN 4109-2

The informative Annexes B, C and D do not apply.

Appendix A 5.2/3

The following applies to the execution of components with insulating materials of granulated polystyrene and binder mixtures[2]:

The product may be used as impact sound insulating material under unheated floating screed in accordance with DIN 18560-2 if the compressibility requirements of DIN 18560-2 are met. In addition, either a maximum relative compression difference of 5 % must be adhered to at deformation under pressure and temperature load or the declared compression stress value must be at least 30 kPa at 10 % compression. In the latter case, dimensional stability at defined temperature and moisture conditions must be shown.

The sound insulation certificate shall be issued with the rated impact sound reduction value.

Appendix A 5.2/4

The following applies to the execution of components with rubber fibre mats and/or polyurethane(PU) foam mats for impact sound insulation[1]:

The construction products may be used as impact sound insulation on solid ceilings under floating screed pursuant to DIN 18560-2 in line with the DES area of application under DIN 4108-10, if the compressibility requirements in DIN 18560-2 are met and the maximum relative compression difference is 5 % at deformation under pressure and temperature load. Evidence of sound insulation must be carried out with the rated value ΔL_w specified for construction design.

Appendix A 5.2/5

Re DIN 4109-36

Informative Annex A does not apply.

A 6 Thermal insulation

A 6.1 General

Under § 3 and § 15(1) MBO[1] physical structures must be positioned, erected, modified and maintained to have thermal insulation in accordance with their use and with climatic conditions.
To meet this requirement for physical structures as a whole and in their separate parts, the technical rules on thermal insulation under Section A 6.2 must be observed.

A 6.2 Technical requirements in respect of the planning, design and execution of building works and parts thereof pursuant to § 85a(2) MBO[1]

Identification/item No.	Planning, design and execution requirements pursuant to § 85a(2) MBO[1]	Title/edition	Further measures pursuant to § 85a(2) MBO[1]
1	2	3	4
A 6.2.1	Thermal insulation in buildings	DIN 4108 - Thermal insulation and energy saving in buildings	
		- 2:2013-02 - Part 2: Minimum thermal insulation requirements	Appendix A 6.2/1
		- 3:2014-11 - Part 3: Climate-related moisture protection – Requirements,	Appendix A 6.2/2

2 Under EAD/ETAG/CUAP

1 Under state laws

Identification/item No.	Planning, design and execution requirements pursuant to § 85a(2) MBO[1]	Title/edition	Further measures pursuant to § 85a(2) MBO[1]
1	2	3	4
		calculation methods and instructions for planning and execution	
		- 4:2013-02 - Part 4: Thermal and moisture protection coefficients	Annexes A 6.2/3 and A 6.2/4
		- 10:2015-12 - Part 10: Application-related requirements for thermal insulation materials – Factory-made products	Appendix A 6.2/5
A 6.2.1	In-situ foam produced from urea-formaldehyde (uf) resin for thermal insulation	DIN 18159-2:1978-06 - Cellular Plastics as in-situ Foam in Building; Part 2: In-situ foam produced from urea-formaldehyde (uf) resin for thermal insulation; application, properties, execution, testing	

Appendix A 6.2/1

Re DIN 4108-2

1 Summer thermal insulation is ensured via the provisions of the energy savings regulation.
2 Re Section 5.2.2:
The exceptions listed only apply to single-layer insulating panels.

Appendix A 6.2/2

Re DIN 4108-3

Section 6 and Appendices B and D do not apply.

Appendix A 6.2/3

Re DIN 4108-4

1 For insulating materials with ETA[2], the rated thermal conductivity value must be determined as follows:
On the basis of the nominal value for category 1 given in the ETA, which represents 90 % of production with a confidence factor of 90 % the rated thermal conductivity value results from conversion to a moisture content at 23 °C and 80 % relative humidity and multiplication by the safety factorγ = 1.2. The conversion factors outlined in the ETA are to be used for conversion for the moisture.

If the ETA prescribes a nominal value for thermal conductivity based on a limit value that during production must not be exceeded (category II), the rated thermal conductivity value is determined by converting to a moisture content at 23 °C and 80 % relative humidity and multiplying by the safety factor γ = 1.05. The conversion factors outlined in the ETA are to be used for conversion for the moisture.

2 Evidence of thermal insulation for components made of composite gypsum panels shall be provided with the rated thermal resistance value. The rated thermal resistance value is the nominal value of thermal resistance R divided by the safety factor γ = 1.2.

2 Under EAD/ETAG/CUAP

1 Under state laws

Draft

Appendix A 6.2/4

The following must be heeded when executing components with construction products as per harmonised standards:

1 Thermal insulation made in-situ from expanded clay lightweight aggregates pursuant to EN 14063-1[1)] may be used in line with the areas of application DZ and DI pursuant to DIN 4108-10 as non-pressure-resistant (dk) thermal insulation filling.

The thermal insulation certificate shall be issued with the rated thermal conductivity value. The rated thermal conductivity value equals the nominal thermal conductivity value multiplied by the safety factor $\gamma = 1.2$.

The nominal thickness of the thermal insulation layer is used to calculate thermal resistance. The nominal thickness is the installation thickness reduced by 20 %.

2 Thermal insulation made in-situ from products with expanded perlite pursuant to EN 14316-1[2)] may be used in line with the areas of application DZ and DI pursuant to DIN 4108-10 as non-pressure-resistant (dk) thermal insulation filling. The thermal insulation certificate shall be issued with the rated thermal conductivity value. The rated thermal conductivity value equals the nominal thermal conductivity value multiplied by the safety factor $\gamma = 1.2$.

The nominal thickness of the thermal insulation layer is used to calculate thermal resistance. The nominal thickness is the installation thickness reduced by 20 %.

3 Thermal insulation made in-situ from products with expanded vermiculite pursuant to EN 14317-1[3)] may be used in line with the areas of application DZ and DI pursuant to DIN 4108-10 as non-pressure-resistant (dk) thermal insulation filling. The thermal insulation certificate shall be issued with the rated thermal conductivity value. The rated thermal conductivity value equals the nominal thermal conductivity value multiplied by the safety factor $\gamma = 1.2$.
The nominal thickness of the thermal insulation layer is used to calculate thermal resistance. The nominal thickness is the installation thickness reduced by 20 %.

4 For decorative wall claddings in roll and panel form pursuant to EN 15102+A1:2011[4)] the rated thermal resistance value shall be taken as the rated thermal resistance value of the value declared in the CE marking divided by the safety factor $\gamma = 1.2$.

5 Thermal insulation made in-situ from mineral wool pursuant to EN 14064-1[5)] may be used in line with the areas of application DZ and DI pursuant to DIN 4108-10 as non-pressure-resistant (dk) thermal insulation filling.

The thermal insulation certificate shall be issued with the rated thermal conductivity value. The rated thermal conductivity value equals the nominal thermal conductivity value multiplied by the safety factor $\gamma = 1.2$.

The nominal thickness of the layer of thermal insulation is used to calculate the thermal resistance. The nominal thickness is the installation thickness reduced by 20 %.

6 Thermal insulation made in-situ from polyurethane (PUR) and polyisocyanurate (PIR) spray foam under EN 14315-1:2013[6)] may be used to make non-pressure-resistant thermal insulation layers in accordance with area of application DZ pursuant to DIN 4108-10, if the following properties under DIN EN 14315-1 are shown:

property	in accordance with DIN EN 14315-1, Section	Stage (minimum)
Density	4.2.4 / E.5	FRC50(20) or FRB50(20)
Proportion of closed cells	4.2.6	CCC4
Bond strength	4.3.8	A3
Dimensional stability	4.3.12	DS(TH)3

The heat insulation certificate shall be issued with the rated value of the thermal conductivity. The rated thermal conductivity value equals the nominal thermal conductivity value multiplied by the safety factor $\gamma = 1.2$.

8 Thermal insulation made in-situ from polyurethane (PUR) and polyisocyanurate (PIR) hard foam under EN 14318-1:2013[7)] may be used to make non-pressure-resistant thermal insulation layers in accordance with area of application WH pursuant to DIN 4108-10, if the following properties under EN 14318-1 are shown:

property	in accordance with	Stage (minimum)

[1] Under state laws

	DIN EN 14318-1, Section	
Density	4.2.3 / E.5	FRC50(20) or FRB50(20)
Proportion of closed cells	4.2.8	CCC4
Bond strength	4.3.4	TS2
Dimensional stability	4.3.7	DS(TH)3

The heat insulation certificate shall be issued with the rated value of the thermal conductivity. The rated thermal conductivity value equals the nominal thermal conductivity value multiplied by the safety factor γ = 1.2.

9 Thermal insulation materials for heat and/or sound insulation in structural engineering **–** Bound EPS fillings under EN 16025-1:2013[8)] may be used for internal insulation of ceilings or base plates (top face) under screed in accordance with DIN 18560-2 without sound insulation requirements in residential and office areas, if the compressibility requirements of DIN 18560-2 are met and the declared compression stress value is at least 50 kPa with 10% compression (stage CS(10)50).

The thermal insulation certificate shall be issued with the rated thermal conductivity value. The rated thermal conductivity value is determined as follows:

On the basis of the nominal value for the CE mark, the rated value of the thermal conductivity results from conversion to a moisture content at 23 °C and 80 % relative humidity and multiplication by the safety factor γ= 1.2. To convert humidity, a conversion factor of F_m = 1.05 shall be used.

10 Factory-made insulating materials of polyethylene foam (PEF) under EN 16069:2012[9)] may be used in line with the areas of application WI and DI pursuant to DIN 4108-10 as non-pressured, additional thermal insulation if they meet the requirements for stage DS(N)2 at a minimum in terms of dimensional stability.
The thermal insulation certificate shall be issued with the rated thermal conductivity value. The rated thermal conductivity value equals the nominal thermal conductivity value multiplied by the safety factorγ = 1.2.

1) Implemented in Germany in DIN EN 14063-1:2004-11
2) Implemented in Germany in DIN EN 14316-1:2004-11
3) Implemented in Germany in DIN EN 14317-1:2004-11
4) Implemented in Germany in DIN EN 15102:2011-12
5) Implemented in Germany in DIN EN 14064-1:2010-06
6) Implemented in Germany in DIN EN 14315-1:2013-04
7) Implemented in Germany in DIN EN 14318-1:2013-04
8) Implemented in Germany in DIN EN 16025-1:2013-07
9) Implemented in Germany in DIN EN 16069:2015-04

Appendix A 6.2/5

The following must be heeded when executing components2 with insulation products with ETA:

1 Factory-made insulation products consisting of plant or animal fibres for thermal insulation and/or soundproofing:

DIN 4108-10, Table 13 applies to use. The air flow resistivity requirements apply only to products with bulk density **≥** 20 kg/m³. For areas of application DAD (dk), DZ, DI (zk), WH, WI (zk) and WTR stage T2 is sufficient in respect of the thickness deviation limits.

The insulation products must be classified in class 0 in respect of resistance to mould.

2 Loose heat and/or sound insulation products made of plant fibres:
The insulation products may be used to make non-pressure-resistant thermal insulation layers in line with areas of application WH, WI, WTR, DZ and DI under DIN 4108-10.

When calculating the thermal resistance of the component, the nominal thickness of the thermal insulation layer is used to calculate the thermal resistance is used for use in ceilings/roofs, taking into account the reduced installed thickness given in the ETA. Where the ETA has no information on this, the nominal thickness is derived from the installed thickness reduced by 20 %.

For use in walls, the slump must be **≥** 1 % under vibration.

2 Under EAD/ETAG/CUAP

1 Under state laws

Draft

The insulation products must be classified in class 0 in respect of resistance to mould.

3 Thermal insulation panels made of mineral materials:
The following key characteristics must be clarified for areas of application WI and DI under DIN 4108-10:

- Deviation limits for length, width, thickness, perpendicularity and flatness
- Dimensional stability
- Water vapour diffusion resistance

and for area of application DEO under DIN 4108-10, compressive strength of at least 150 kPa.

4 Insulation products made from expanded perlite (EPB), by way of derogation from EN 13169:
DIN 4108-10, Table 11, applies to use, with the exception of the requirement relating to bending strength.

5 Insulating materials of granulated polystyrene and binder mixtures:
The product may be used as thermal insulation in line with areas of application DEO, DAD and DAA(dm) under DIN 4108-10 if the declared compression stress value at 10 % compression is at least 100 kPa and the maximum relative compression difference is 5 % at deformation under pressure and temperature load.

6 Products with reflective layers for thermal insulation of building envelopes:

6.1 Application
The products may be used as non-pressured, additional heat insulation on the inside of heat transferring construction components corresponding to the area of application DI and WI in accordance with the Standard DIN 4108-10.
They may only be incorporated in constructions in which they are protected against rainfall, weathering and moisture penetration.

6.2 Rated value of thermal resistance
The calculation of the heat insulation is to be performed with the rated value of the thermal resistance. The rated value of the thermal resistance shall be determined as follows:

The rated value of the thermal resistance results on the basis of the nominal value given in the ETA ("Core thermal resistance" without neighbouring airspaces) divided by the safety factor $\gamma = 1.2$. With products based on natural fibre-based insulation materials, a conversion must also be completed for a moisture content of 23 °C and 80 % relative humidity with the application of the conversion factors given in the ETA.

In areas where the products will be pressed together (e.g. fastening areas on the supporting structure), the thermal resistance of the products should not be given for the certificate.

6.3 Thermal resistance of neighbouring, unventilated airspaces
When calculating the thermal resistance of unventilated airspaces that are enclosed by the products, with a length and width of more than 10 times the thickness in accordance with DIN EN ISO 6946, Annex B, the following values should be used:

- Emissions grade ε for the upper surface of the products in accordance with ETA
- h_a in accordance with DIN EN ISO 6946, Table B.2, where $\Delta T = 10$ K
- $h_{ro} = 5.7$ W/(m²·K) in accordance with DIN EN ISO 6946, Table A.1

Only airtight constructional systems may be considered, where the products are protected against contamination and weathering on the inner side of the construction.

6.4 Climatic moisture protection
The values given in the ETA for the products must be used for the calculation report of the climatic moisture protection in accordance with DIN 4108-3.

7 Construction kits for the insulation of inverted roofs in accordance with ETAG 031 Part 1 with XPS and EPS insulation materials may be positioned over the roof sealing for thermal insulation if the construction kit corresponds to the structures and conditions of use listed in DIN 4108-2 for the thermal insulation systems in inverted roofs.

The thermal insulation certificate is to be issued with the rated value of the thermal conductivity or the thermal resistance of the insulation material in the construction kit.

The rated value of thermal conductivity shall be determined from the corrected conductivity value λ_{cor} given in the European technical approval for level 1 multiplied by the safety factor $\gamma = 1.2$. Correspondingly, the rated value of

[1] Under state laws

the thermal resistance results from the corrected value of the thermal resistance given in the European technical approval for level 1, R_{cor} divided by the safety factor $\gamma = 1.2$.

By way of derogation, the rated value for thermal conductivity in accordance with DIN 4108-4 may be calculated for extruded polystyrene sheets (XPS) to be used in construction kits in accordance with EN 13164.

When calculating the heat transfer coefficients of the roof, the calculated heat transfer coefficient must be raised by the allowance value ΔU in accordance with DIN 4108-2.

Draft

[1] Under state laws

B Technical building regulations to be observed for components and special constructions in addition to the technical building regulations listed in Section A

B 1 General

This section contains the Technical Building Regulations to be observed for components and special constructions. To facilitate application, the Technical Building Regulations are presented for each special construction/component, as they serve to clarify several basic requirements.

Physical structures must be stable on their own over their entire period of use as a whole and in their separate parts. They must be positioned, designed and fit for purpose so that no hazardous situations or unreasonable inconveniences arise.

B 2 Technical regulations for special constructions and components pursuant to § 85a(2) MBO[1]

Identification/item No.	Planning, design and execution requirements pursuant to § 85a(2) MBO[1]	Measures/specifications pursuant to § 85a(2) MBO[1]	
1	2	3	
B 2.1 Special constructions			
B 2.1.1	Temporary structures - Tents	DIN EN 13782:2015-06	Appendix B 2.1/1
B 2.1.2	Fairground and amusement park machinery and structures	DIN EN 13814:2005-06	Appendix B 2.1/2
B 2.2 Building components			
B 2.2.1 Components for walls, roofs, ceilings and façade structures			
B.2.2.1.1	Cladding for external walls, ventilated at rear	DIN 18516-1:2010-06	Annexes B 2.2.1/1
		DIN 18516-3:2013-09	
		DIN 18516-5:2013-09	Appendix B 2.2.1/2
B 2.2.1.2	Load-bearing external walls made from construction kits		Appendix B 2.2.1/3
B 2.2.1.3	Curtain walls		Appendix B 2.2.1/4
B 2.2.1.4	Self-supporting, double skin, metal faced insulating panels		Appendix B 2.2.1/5
B 2.2.1.5	External thermal insulation composite systems	TR – WDVS with ETA under ETAG 004, June 2016	
B 2.2.1.6	In-situ concrete walls of formwork blocks	TR - Application rules for non-load-bearing permanent formwork kits/systems and formwork blocks for the construction of in-situ concrete walls, June 2016	
B 2.2.1.7	Construction kits for internal partition walls to be used as non-load-bearing walls[2]		Appendix B 2.2.1/6
B 2.2.1.8	Construction kits for timber, metal and reinforced concrete buildings[2]		Appendix B 2.2.1/3
B 2.2.1.9	Prefabricated room units for buildings[2]		Appendix B 2.2.1/3
B 2.2.1.10	Building components made of gypsum plasterboards, gypsum plasterboard products from reprocessing, gypsum plasterboards with fleece reinforcement, gypsum fibreboards and prefabricated gypsum plasterboard panels with a cellular paperboard core		Appendix B 2.2.1/7
B 2.2.1.11	Light load-bearing steel/timber – roofing elements[2]		Appendix B 2.2.1/8

Draft

[1] Under state laws
[2] Under EAD/ETAG/CUAP

Identification/item No.	Planning, design and execution requirements pursuant to § 85a(2) MBO[1]	Measures/specifications pursuant to § 85a(2) MBO[1]	
1	2	3	
B 2.2.2 False ceiling structures			
B.2.2.2.1	Gypsum plasterboard ceiling linings and false ceilings	DIN 18168-1:2007-04	
B 2.2.2.2	Suspended ceilings with fibre cement components or cement-bound building panels		Appendix B 2.2.2/1
B 2.2.3 Components made of heat and sound insulating materials			
B 2.2.3.1	Factory-made foam glass gravel		Appendix B 2.2.3/1
B 2.2.4 Storage			
B 2.2.4.1	Storage in the construction trade	DIN EN 1337-1:2001-02	Annex B.2.2.4/1
B 2.2.5 Components for sealing physical structures Under § 13 MBO physical structures must be positioned, designed and fit for purpose so that no dangers or unreasonable inconveniences arise due to water or moisture.			
B 2.2.5.1	Roof waterproofing made of reinforced bitumen sheets	DIN SPEC 20000-201:2015-08 Section 5.1	
B 2.2.5.2	Roof waterproofing made of plastic and rubber sheets	DIN SPEC 20000-201:2015-08 Section 5.3	
B 2.2.5.3	Building waterproofing made of plastic and rubber damp-proof courses	DIN SPEC 20000-202:2016-03 Section 5.3	
B 2.2.5.4	Building waterproofing made of bitumen damp-proof courses	DIN SPEC 20000-202:2016-03 Section 5.2	
B 2.2.5.5	Building waterproofing against ground moisture and water made of plastic and rubber sheets	DIN SPEC 20000-202:2016-03 Section 5.3	
B 2.2.5.6	Building waterproofing against ground moisture and water made of bitumen sheets	DIN SPEC 20000-202:2016-03 Section 5.2	
B 2.2.5.7	Reinforced bitumen sheets for waterproofing of concrete bridge decks and other trafficked areas	DIN V 20000-203:2010 05 Section 5	
B 2.2.5.8	Surface sealing for containers and wet rooms liquid-applied waterproof products in conjunction with ceramic tiles and slab surfaces		Appendix B 2.2.5/1
B 2.2.5.9	Building waterproofing made of polymer-modified bitumen coatings		Appendix B 2.2.5/2
B 2.2.5.10	Roof sealing systems made of liquid-applied substances		Appendix B 2.2.5/3
B 2.2.5.11	Roof sealing systems made of mechanically secured roof sealing membrane		Appendix B 2.2.5/4
B 2.2.5.12	Systems for sealing walls and floors in wet rooms		Appendix B 2.2.5/5
B 2.2.5.13	Bridge and parking deck waterproofing made of liquid-applied substances		Appendix B 2.2.5/6
B 2.2.5.14	Roof waterproofing made of liquid and strip-type substances in conjunction		Appendix B 2.2.5/7
B 2.2.5.15	Roof and building waterproofing made of waterproofing layers in conjunction with other substances		Appendix B 2.2.5/8
B 2.2.5.16	Waterproofing systems against water from various structural parts indoors		Appendix B 2.2.5/9

[1] Under state laws

Draft

Identification/item No.	Planning, design and execution requirements pursuant to § 85a(2) MBO[1]	Measures/specifications pursuant to § 85a(2) MBO[1]	
1	2	3	
	and outdoors made of liquid-applied polymer-modified sealing slurries and other components under ceramic tiling		
B 2.2.5.17	Waterproofing systems against water on walls and floors indoors and outdoors made of polymer-waterproofing strips and other components		Appendix B 2.2.5/9
B 2.2.5.18	Waterproofing of vertical wall joints in bitumen wall waterproofing with single-component bitumen-polyurethane mixture		Appendix B 2.2.5/10
B 2.2.6 Site drainage Site drainage must be designed to be stable and so that its use does not cause any leakage, particularly of substances dangerous to health or the environment or causes unreasonable inconvenience. To meet the requirements on the quality of site drainage, all characteristics contained in the hEN [harmonised technical specifications] must, under harmonised technical specifications, be stated in the declaration of performance for construction products.			
B 2.2.6.1	Anti-flooding devices for buildings		Appendix B 2.2.6/1
B 2.2.6.2	Drainage channels for vehicular and pedestrian areas		Appendix B 2.2.6/2
B 2.2.6.3	Pipes and fittings of concrete, steel fibre reinforced concrete and reinforced concrete		Appendix B 2.2.6/3
B 2.2.6.4	Manholes and inspection chambers of concrete, steel fibre reinforced concrete and reinforced concrete		Appendix B 2.2.6/4
B 2.2.6.5	Non-alloy steel tubes and fittings for the conveyance of water and other aqueous liquids		Appendix B 2.2.6/5

Appendix B 2.1/1

Re DIN EN 13782

The following is to be observed when applying the technical rule:

1 Re Section 7.4.2.2:
As regards the proof of stability of tents which are to be assessed as temporary structures for installation locations too where $v_{b,0} > 28$ m/s, the peak velocity pressures as per Table NA.B.3 or Section NA.B.3.3 of DIN EN 1991-1-4/NA:2010-12 shall be applied. These may be reduced pursuant to Section 7.4.2.2. Other reductions in peak velocity pressures may not be applied.

2 Section 12 and Appendices B and D are excluded from the insertion.

Appendix B 2.1/2

Re DIN EN 13814

The following is to be observed when applying the technical rule:

1.1 Section 1 shall be worded as follows:
"This standard shall be applied in relation to temporary structures as per § 76 MBO[1], e.g. carousels, swings, boats, Ferris wheels, roller coasters, slides, platforms, textile and membrane structures, stalls, stages, funfair shows and superstructures for artistic performances in the air. It shall also apply to the design of corresponding structural works which are installed in amusement parks for an extended period, with the exception of the wind load evaluations and the foundation design. This standard shall not apply to tents. Temporary structures do not include permanent platforms, building site equipment, scaffolding and transferable agricultural structures."

[1] Under state laws

Draft

1.2 When applying the standard, the designs as at March 2010 which were published by the temporary structures working committee NA 005-11-15 AA (http://www.nabau.din.de) must be taken into account.

2.1 Where references to the ENV 1991 to ENV 1997 series of standards are not dated, the corresponding technical rules under Section A shall be applied.

2.2 In the case of references to "relevant European standards" or "EN standards", applicable technical rules in the administrative provision in the Technical Building Regulations shall be applied.

3. Sections 3.1 to 3.7 are not covered by the insertion.

4.1 Re Section 5.2:
When selecting the materials, the conditions of use specified in the Model Building Regulation and in the provisions based on this regulation (each time in accordance with Federal State law) must be heeded.

4.2 Re Section 5.3.3.1.2.2:
Vertical live loads where qk = 7.5 kN/m² shall be assumed for platforms which do not have fixed seats and their accesses and landings.

4.3 Re Section 5.3.3.4:
When applying Table 1, the temporary structure which is consolidated by the requisite protection and reinforcement measures shall be assessed when not in use in relation to the maximum envisaged wind zone with the wind speed pressures as per Table NA.B.3 or Section NA.B.3.3 of DIN 1991-1-4:NA:2010-12. These wind speed pressures may be reduced by a factor of 0.7. No other reductions in wind speed pressures may be applied. By way of an alternative, proof of the stability of temporary structures when not in use may also be furnished in relation to installation locations where $v_{ref} > 28$ m/s using the peak velocity pressures as per Table NA.B.3 or Section NA.B.3.3 of DIN EN 1991-1-4:NA:2010-12. These wind speed pressures may be reduced by a factor of 0.7. Other reductions in peak velocity pressures may not be applied.

Fig. 1 is not covered by the insertion.

4.4 Re Section 5.3.6.2:
The partial load factor $\gamma_G = 1.0$ shall be used for permanent actions whose effects are advantageous.

4.5 Re Section 5.6.5.3:
Buckled foot straps in trapeze swings, including their fixtures and connections, must have a breaking load of at least 2 kN.

5 Re Section 6:
Instead of the sections in the standard listed below which are not covered by the insertion, the requirements laid down in the Guideline on the construction and operation of temporary structures[1] shall apply.

5.1 Sections 6.1.3.2, 6.1.3.3, 6.1.4.1, 6.1.4.5 and 6.1.5.2 are not covered by the insertion.

5.2 Re Section 6.1.6.4:
In the case of swing carousels, the failure of a carrying chain, in particular, should not result in the passenger safety device (closing chain, bar, etc.) malfunctioning.

5.3 Re Section 6.2.1.2:
Rotors must have a closed cylinder wall. The floor and inside of the cylinder wall shall be executed without prominent or recessed parts. It should not be possible for either the user or spectators to reach the rim of the cylinder wall. The height adjustable floor shall be incorporated into the cylinder with a small joint gap and guided in the same direction as the rotation of the cylinder. The doors shall be incorporated into the cylinder wall with small joint gaps. The rotors shall be designed such that they cannot start when the doors are open.

5.4 Re Section 6.2.2.2:
The height of the protector in open gondolas on Ferris wheels in which passengers are able to stand up during operation must be at least 0.55 m, measured from the top edge of the seat. It must be possible to close entry and exit points at the height of the protector by means of fixed devices. They must be capable of being secured with locks which cannot be disengaged automatically.

5.5 Re Section 6.2.3.1:
Roller coasters shall be fitted all round with a specification class J3 area barrier.

Ghost train tracks shall be fenced off to spectators as far as the entry and exit points using at least specification class J2 area barriers.

[1] Under state laws

5.6 Re Section 6.2.3.5.1:
As regards ghost trains where the vehicles travel slowly (at speeds ≥ 3 m/s) and which have appropriate impact absorbers, a block system can be dispensed with.

5.7 Re Section 6.2.3.5.2:
Double-deck ghost trains must have back-run safety devices on inclines. On lines on a falling gradient, provision must be made, if necessary, for brakes to control the speed and tilt protection devices.

5.8 Re Section 6.2.5.1.1:
A fixed, horizontal and smooth sliding surface at least 2 m wide must be present between the turntable and buffer strips.

5.9 In Section 6.2.5.2, paragraph 1 is not covered by the insertion.

5.10 Section 6.2.6 is not covered by the insertion.

5.11 Re Section 6.2.7.5:
Shooting tables must be secured such that they cannot be moved. The distance to individual targets no more than 0.40 m deep which are limited in terms of area (e.g. little houses for roller shooting) may be reduced to up to 2.40 m.

5.12 Sections 6.4, 6.5 and 6.6 are not covered by the insertion.

6 Section 7 is not covered by the insertion.

7 Annexes A, C, E, F, H and I are not covered by the insertion.

Appendix B 2.2.1/1

Re DIN 18516-1

1 Re Section 7.1.1(a):
Corrosion resistance class II stainless steels may also be used for linings.

2 Reference is made to the following error correction:
Re Annex A, Section A 3.1:
Paragraph 4 should read instead of "... as per Fig. A.1.b) ...", the correct version is "... as per Fig. A.1.c) ...", and instead of "... as per Fig. A.1.c) ...", the correct version is "... as per Fig. A.1.d) ..".
Re Annex A, Fig. A.4:
"available $F_{Q,Ed}$" should read "available F_Q", "available $F_{Z,Ed}$" should read "available F_Z", "permissible $F_{Q,Rd}$" should read "permissible F_Q", "permissible $F_{Z,Rd}$" should read "permissible F_Z", "max. $F_{Q,Rd}$" should read "max. permissible F_Q" and "max. $F_{Z,Rd}$" should read "max. permissible F_Z"

Appendix B 2.2.1/2

Re DIN 18516-5

Re Section 5.4.2:
Equation (11) should read as follows:

$$V_{Rk,red} = V_{Rk} \cdot \frac{d}{d + 2 \cdot z_A}$$

Appendix B 2.2.1/3

1 Stability

Where load-bearing features of building components or kits in accordance with ETA 2 in the form of calculated load-bearing values, mechanical resistance or complete static calculations are stated in the declaration of performance, these count among the building documents.

2 Thermal insulation

For the construction kit, the specified thermal resistance R (m²·K)/W) should be divided by the value 1.2 as the rated thermal resistance value or the specified heat transmission coefficient U (W/(m²·K) should be multiplied by the factor 1.2 or factor 1.2 is not required if proof of thermal insulation under DIN 4108 Parts 2 and 3 and proof of energy-saving

[1] Under state laws

Draft

thermal insulation using the rate values pursuant to DIN 4108-4 are provided. The insulating materials used in the construction kit must meet the requirements under DIN 4108-10 in line with the relevant area of application.

2 Under EAD/ETAG/CUAP

Appendix B 2.2.1/4

Stability
To meet the requirement under Section A 1.1, the relevant provisions in Sections A 1.2 apply to façades manufactured with the curtain wall construction kit for structural safety analysis.

Appendix B 2.2.1/5

1. Stability

Components made of sandwich panels as per EN 14509 may not be used to brace buildings, building parts or structural works.

Verification of the insulating panels shall be undertaken in accordance with Sections E.2, E.3, E.5 and E.7 of EN 14509 unless another provision below does this; Sections E.4.2, E.4.3 and E.6.3 shall not be applied. The deformation limits as per EN 14509, Section E.5.4, must be observed. The differences in temperature between the basecourses must be taken into account. The maximum temperature differential between the two temperatures operating simultaneously in both basecourses where $\Delta T = T_1 – T_2$ shall be specified as follows:

- Basecourse temperature T_2 on the inside
  Generally speaking, T_2 shall be assumed to be +20 °C in winter and +25 °C in summer; this shall apply to the proof of stability and to the proof of serviceability.
  In special applications (e.g. air-conditioned halls such as ripening halls, refrigerated warehouses), T_2 shall be set in accordance with the service temperature inside the building.

- Basecourse temperature T_1 on the outside
  In winter T_1 is set at -20 °C; for snow-covered roofing elements T_1 is regulated in the standard.
  In summer, the basecourse temperature T_1 is set pursuant to the standard for proof of serviceability, at T_1 +80 °C for proof of stability (in direct sunlight) and at +40 °C (where not in direct sunlight).

The insulating panels shall be attached directly (visibly) by screws extending through both basecourses, the usefulness of which has been demonstrated for this purpose. The wrinkling stresses at the intermediate supports shall only apply when attaching the panels using a maximum of 3 screws per metre. Where more than 3 screws per metre are used, the wrinkling stresses shall be reduced by the factor K = (11 – n) / 8 (n = number of screws per metre).

Proof of the load-bearing capacity of the screws and the screw head displacements shall be furnished in accordance with Technical Building Regulations or the proof of usability regarding the screws, in which connection the actions and combinations thereof shall be determined analogous to EN 14509, Section E.5.3. In the case of continuous sandwich elements, the incorporation of crease joints above the interior supports (ultimate load method as per EN 14509, E.7.2.1 and E.7.2.3) may not be specified when determining the impacts in relation to the fastenings (no chain of single-span elements).
The combination coefficients ψ_0 and ψ_1 shall be taken from Table E.6 and the load factors γ_F from Table E.8 in standard EN 14509. The material-related load factors γ_M are listed in the table below:

	Limit state	
Characteristics in respect of which γ_M is valid	Load-bearing capacity	Serviceability
Metal basecourse yield	1.10	1.00
Creasing of a metal basecourse in the panel and at a central support (interaction with the support reaction)	2.80	1.40
Shear failure of the core	2.40	1.30
Shear failure of a profiled basecourse	1.10	1.00
Compressive failure of the core	2.40	1.30
Profiled basecourse failure at the central support	1.10	1.00

1 Under state laws

2 Fire safety / fire resistance

The fire resistance of building components (building types) is not regulated.

3 Thermal insulation

In order to determine the design value, the specified heat transition coefficient U or the specified nominal value of the heat transmission coefficient must be multiplied by a factor of 1.2.

Appendix B 2.2.1/6

The provisions of A 1.2.7.1 apply to the use of construction kits of fully or partly glazed dividing walls in category IV under ETA[2].

[2] Under EAD/ETAG/CUAP

Appendix B 2.2.1/7

1.1 Gypsum plasterboards under EN 520 used with load-bearing (including stiffening) components must meet the provisions of DIN 18180:2014-09. Gypsum plasterboards from reprocessing manufactured pursuant to EN 520 may only be used on load-bearing components if the reprocessing does not reduce load-bearing capacity.

1.2 The values stated for "shearing strength" under the CE marking are not suitable for dimensioning.

2 Thermal insulation
The thermal insulation certificate shall be issued with the rated thermal resistance value. The rated thermal resistance value is the nominal value of thermal resistance R divided by the conversion factor for moisture content F_m = 1.25.

Appendix B 2.2.1/8

Verification of the limit state of serviceability must be performed without bonding the steel profiles with the timber components. The formation of water pockets must be excluded.
Compliance of sufficient wood protection (particularly condensation) for the roofing elements must be demonstrated pursuant to DIN 68800-2.

Appendix B 2.2.2/1

EN 13964 must be observed with the following restrictions when using fibre cement boards under EN 12467 or cement-bound building panels under ETA[2] as suspended ceilings indoors:

1 Anchoring in concrete, cellular concrete, no-fines-texture concrete, bricks, steel, timber or similar anchoring bases is only admissible with anchoring elements such as, for example, rawl plugs, setscrews or bolts if

a. European Technical Approval or general building inspection approval is present for this use, or
b. the use thereof is covered by the Technical Building Regulations.

2 The heat insulation certificate shall be issued with the rated thermal conductivity value. The rated thermal conductivity value is derived from the nominal value specified in ETA[2] by converting to a moisture content at 23°C and 80% relative humidity. The conversion factors outlined in the European technical approval are to be used for conversion.

[2] Under EAD/ETAG/CUAP

Appendix B 2.2.3/1

There are no technical rules on the planning, design and execution of factory-made foam glass gravel under load-bearing foundation slabs[3]

[3] application of § 16a MBO[1]

[1] Under state laws

Draft

Annex B.2.2.4/1

Bearings with natural rubber (NR) under EN 1337-3 may only be used in ozone-free areas.

Appendix B 2.2.5/1

The surface sealings under EN 14891 may be used for the sealing of wall and floor surfaces as well as swimming pools that are located outdoors and not connected to buildings.

Appendix B 2.2.5/2

Table: Requirements on polymer-modified, thick bitumen coatings in accordance with DIN EN 15814 for the application

Product characteristics in accordance with EN 15814	**Requirements on levels and classes for the application**	
	Scope of application 1: Sealing of construction components against ground moisture and non-accumulating seepage water	Scope of application 2: Sealing of construction components against accumulating seepage water up to a depth of 3.0 m under the ground surface and against non-pressurised water on roof surfaces with significant stress
Crack-bridging ability	Method A: CB2	Method A: CB2
Rain fastness	at least R2 (≥ 8 h)	at least R2 (≥ 8 h)
Resistance to water	Pass	Pass
Flexibility at low temperatures	Pass	Pass
Dimensional stability at high temperatures	Pass	Pass
Decrease in thickness from drying	Declaration of value (≥ 50 %)	Declaration of value (≥ 50 %)
Reaction to fire	at least E	at least E
Watertightness	W 1, W 2A or W 2B	W 2A
Compressibility	C 1, C 2A or C 2B	C 2A

Appendix B 2.2.5/3

Products with ETA under ETAG 005/EAD xyz "Liquid-applied roof waterproofing" may be used for waterproofing used and unused roof areas as defined in DIN 18531 depending on the areas of application and stress class if at least the following performance levels are demonstrated in an ETA:

Table 1: Unused roof areas

Unused roof areas	**Technical performance levels under ETAG 005**					
Stress class pursuant to DIN 18531	Climate zone	Durability W	Payload P	minimum surface temperature TL	maximum surface temperature TH	Minimum layer thickness[8] [mm]
I A	M	W2	P4	TL 3	TH 3	Inclination ≤ 2 %: 1.5 mm inclination < 2 %: 2.0 mm
I B			P4	TL 2	TH 2	
II A			P3	TL 3	TH 3	
II B			P3	TL 2	TH 2	

Table 2: Used roof areas

Used roof areas	**Technical performance levels under ETAG 005**					
Type of utilisation	Climate zone	Durability W	Payload P	minimum surface temperature TL	maximum surface temperature TH	Minimum layer thickness[7] [mm]
directly used	S	W3	P4	TL 3	TH 3	2.0
indirectly used	M			TL 2	TH 2	2.0

Also applicable:
For extensively and intensively green areas, the waterproofing must be root-resistant or protection against root penetration must be ensured by other means.

[1] Under state laws

Draft

[8] The average value of the layer thickness applied must not be below the required minimum layer thickness and no individual value must be more than 5% below the minimum layer thickness. Where the minimum layer thickness specified in the European technical approval is higher than the minimum layer thickness specified herein, the higher value shall apply.

Appendix B 2.2.5/4

Waterproofing layers of mechanically secured waterproofing systems with an ETA under ETAG 006/EAD xyz may be used as roof sealing for unused roof areas if the waterproofing layers meet the requirements of DIN SPEC 20000-201:2015-08 Section 5.1 or 5.3.

Appendix B 2.2.5/5

Construction kits for sealing wet rooms with an ETA under ETAG 022/EAD xyz may be used if at least the following performance characteristics are demonstrated:

		Requirements for use in stress class A for coverings with ETA in accordance with ETAG 022/EAD xyz		
Item number	**Product characteristics in accordance with ETAG 022 Part ... (Section)**	**ETAG 022 Part 1/ EAD xyz**	**ETAG 022 Part 2/ EAD xyz**	**ETAG 022 Part 3/ EAD xyz**
1	2	3	4	5
1	Reaction to fire Part 1, 2, 3 (2.4.1)	E	E	E
2	Release of hazardous substances Part 1, 2, 3 (2.4.2)	Compliance with the statutory requirements of substances that may be released in installed condition	Compliance with the statutory requirements of substances that may be released in installed condition	Compliance with the statutory requirements of substances that may be released in installed condition
3	Water vapour permeability Part 1, 2, 3 (2.4.3)	Value declaration	Value declaration	Value declaration
4	Watertightness Part 1, 2, 3 (2.4.4.1)	waterproof	waterproof	waterproof
5	Crack-bridging ability Part 1, 2, 3 (2.4.4.2)	Certificate only with underlay at risk of cracks ≤ 0.4 mm	Certificate for walkways bonded with the underlay and only with underlay at risk of cracks: ≤ 0.4 mm	Certificate for thin and brittle plates that are bonded to the underlay and only with underlay at risk of cracks: ≤ 0.4 mm
6	Adhesive strength Part 1, 2, 3 (2.4.4.3)	≤ 0.5 MPa	≤ 0.3 MPa	≤ 0.3 MPa
7	Scratch resistance Part 1, 2, 3 (2.4.4.4)	Proof only for systems without wearing surface: scratch-proof	Proof only for systems without wearing surface: scratch-proof	Proof only for systems without wearing surface: scratch-proof
8	Seam-bridging ability Part 1, 2, 3 (2.4.4.5)	Certificate only for underlay with seam: Rating category 2: Test passed	Certificate only for underlay with seam: Rating category 0: No testing required Rating category 2: Test passed	Certificate only for underlay with seam: Rating category 0: No testing required Rating category 2: Test passed
9	Impermeability at joints Part 3 (2.4.4.6)	Proof not provided for	Proof not provided for	waterproof
10	Watertightness at penetrations Part 1, 2 (2.4.4.6) Part 3 (2.4.4.7)	Rating category 2: Test passed	Rating category 2: Test passed	Rating category 2: Test passed
11	Temperature resistance Part 1 (2.4.6.1) Part 2, 3 (2.4.6.2)	Rating category 2: Tensile bond strength ≤ 0.5 MPa. Additional proof for crack-prone underlay: Crack-bridging ability ≤ 0.4 mm or for underlay with seam: Proof of seam-bridging ability	Change in tensile strength and elongation: ≥ 20 %	Change in bending rigidity: ≥ 20 % Tensile bond strength: ≤ 0.3 MPa

[1] Under state laws

		Requirements for use in stress class A for coverings with ETA in accordance with ETAG 022/EAD xyz		
Item number	**Product characteristics in accordance with ETAG 022 Part ... (Section)**	**ETAG 022 Part 1/ EAD xyz**	**ETAG 022 Part 2/ EAD xyz**	**ETAG 022 Part 3/ EAD xyz**
1	2	3	4	5
12	Water resistance Part 1 (2.4.6.2) Part 2, 3 (2.4.6.3)	Tensile bond strength: ≤ 0.5 MPa	Tensile bond strength: ≤ 0.3 MPa	demonstrated if requirements under row 10 and row 6 are met
13	Alkaline resistance Part 1 (2.4.6.3) Part 2, 3 (2.4.6.4)	Tensile bond strength: ≤ 0.5 MPa	Change in tensile strength and elongation: ≥ 20 % after storage at 50°C for 16 weeks	Tensile bond strength: ≤ 0.3 MPa
14	Reparability Part 1, 2, 3 (2.4.7.2)	Tensile bond strength: ≤ 0.5 MPa	repairable	repairable
15	Thickness of sealing layer Part 1, 2, 3 (2.4.7.3)	≤ 2.0 mm for mineral waterproofing slurries ≤ 1.0 mm for reactive resin systems ≤ 0.5 mm for dispersions	≤ 0.20 mm with wearing surface ≤ 0.70 mm without wearing surface	≤ 5 mm
16	Processability Part 1, 2, 3 (2.4.7.3)	processable	processable	Proof not provided for

Polymer dispersions may only be installed on wall surfaces.

Coverings that have been assessed pursuant to ETAG 022 Annex H (Paint systems for walls without wearing surface)**/EAD xyz** may not be used in stress class A.

Appendix B 2.2.5/6

Construction kits for liquid-applied seals with ETA as per ETAG 033/EAD xyz may be used for seals on bridges and other concrete traffic areas. Depending on the usage areas, they must provide evidence of the properties set out in the Table and fulfil the requirements set out therein.

Products with an ETA as per ETAG 033/EAD xyz may be used as seals for the following usage areas:

(I) Traffic areas for vehicular traffic with very high load such as bridges, court cellar ceilings and access ramps for all types of vehicles.
Products in usage category (A: A.1- A.4) may be used.

(II) Traffic areas for vehicular traffic with low and high load such as bridges for pedestrians and cyclists and court cellar ceilings, parking levels and access ramps thereto with vehicular traffic up to 160 Kn
Products in usage category (A) or (B) may be used. Products in usage category (B) may only be used in conjunction with a surface layer.

Property as per ETAG 033 with detection method as per Section 5/EAD xyz		**Evidence provided for test categories (P,S,T) as per ETAG 033, Annex D/EAD xyz**	**Requirement**
5.1.1.1	Tensile bond strength to underlay Thermal impact and thermal ageing freeze-thaw cycle Processing climate Damp concrete Construction joint Section joint	P1, S0, T5 P1, MA/LMA/CBM, T5 P1, FT, T5 $P2_{min}$, S0, T5 P3, S0, T5 P4, S0, T5 P4, S0, T5	> 1.3 MPa (initial value) > 1.3 MPa (for A.1, A.2, A.3) > 1.3 MPa and <30 % waste from initial value > 1.3 MPa and <30 % waste from initial value > 1.3 MPa and <30 % waste from initial value > 1.3 MPa and <30 % waste from initial value > 1.3 MPa and <30 % waste from initial value
5.1.1.2	Crack-bridging ability	P1, MA/LMA_{max}/CBM, HA, T2/T1 P1, UV, T2/T1	Pass (for A) Pass (for B)
5.1.1.4.1	Resistance to compaction of rolled asphalt	P1, CBM, T5	Pass (for A.1)
5.1.1.5	Resistance to thermal impact tensile strength/deformation behaviour	P1, S0, T5	> 3.0 Mpa / 350 % (initial value) < 30 % deviation from initial value

[1] Under state laws

Property as per ETAG 033 with detection method as per Section 5/EAD xyz		Evidence provided for test categories (P,S,T) as per ETAG 033, Annex D/EAD xyz	Requirement
	Change in tensile strength Change in deformation behaviour	P1, MA/LMA$_{max}$/CBM, T5	(for A.1, A.2, A.3) < 30 % deviation from initial value (for A.1, A.2, A.3)
5.1.1.6	Resistance to perforation	P1, S0, T5	passed with I_4 (for B)
5.1.1.7 / 5.1.4.2	Shearing strength of joined systems	P1, LMA$_{min}$, T5 P1, LMA$_{min}$, FT, T5	> 0.45 MPa (for A.1, A.2, A.3) (initial value) > 0.45 MPa and < 20 % waste from initial value (for A.1, A.2, A.3)
5.1.1.8	Watertightness	P1, S0, T5 P1, UV, T5	watertight (for A and B) watertight (for B)
5.1.4.1	Bond strength to protective layer	P1, MA/LMA$_{min}$/CBM ,T5 P1, MA/LMA$_{min}$/CBM ,FT, T5	> 0.4 MPa (for A.1, A.2, A.3) (initial value) > 0.4 MPa (for A.1, A.2, A.3) < 30 % waste from initial value
5.1.4.3	Slip resistance	Declared value	> 55 (for B)
5.1.7.1.2	Compatibility of materials with active substances: Water: Alkali Oil, petrol, diesel, de-icing salt Bitumen	P1, T5 change in micro-hardness change in mass change in micro-hardness change in mass -------- change in micro-hardness	 > -15 IHRD < 2.5 % Value > -7 IHRD + Value after exposure to water < 0.5 % Pass -16 IHRD < value < 6 IHRD
5.1.7.1	Aspects of durability/tensile strength/deformation behaviour Resistance to thermal ageing Change in tensile strength Change in deformation behaviour Resistance to UV radiation Change in tensile strength Change in deformation behaviour Resistance to wear and tear	P1, S0, T5 P1, HA, T5 P1, UV, T5 Declared value	> 3.0 MPa / 350 % (initial value) < 30 % deviation from initial value (for A) < 30 % deviation from initial value (for A) < 30 % deviation from initial value (for B) < 30 % deviation from initial value (for B) Pass (for B)
5.1.7.2	Aspects of usability: Resistance to sagging Minimum layer thickness / maximum layer thickness	 Declared value for change in mass Declared value	 pass (≥ 10.0 %) 2.0 mm/6.0 mm

* The combined impact of water, temperature and alkali may be taken into account when determining change in mass.

Appendix B 2.2.5/7

The waterproofing system with an ETA[2] can be used as a two-layer compound seal for used and unused roof areas on concrete substrate if all key EAD features are demonstrated. The key feature resistance to root penetration is only required for use in green roofs.

Appendix B 2.2.5/8

Waterproofing layers with an ETA[2] may be used as one-layer roof sealing for unused roof areas as defined in DIN 18531 if the key features meet the requirements for rubber sheets of DIN SPEC 20000-201:2015-08 Table 17.

Waterproofing layers may also be used to manufacture building waterproofing against ground moisture, non-pressing water, water pressing from the outside as defined in DIN 18195 Parts 4, 5 and 6 if the key features of the requirements for rubber sheets of DIN SPEC 20000-202:2016-03, Table 26.

[1] Under state laws

Draft

Appendix B 2.2.5/9

The waterproofing system with an ETA[2] can be used to seal wet rooms and to seal containers in line with the areas of application and actions demonstrated with an ETA[2] if all key EAD features are demonstrated.

Appendix B 2.2.5/10

The waterproofing system for manufacturing barriers to connections to ascending components or penetrations in conjunction with surface sealing of bitumen sheets with an ETA[2] may be used on unused or extensively green roofs if all key features with a ETA[2] have been demonstrated and resistance to dynamic impression is demonstrated at 2.0 m drop height under EN 12691:2006.

The hardened sealing layer must have a minimum thickness of 1.5 mm. Where there is a slight inclination of 2 % in the sealing layer on the roof, a minimum layer thickness of 2.0 mm must be kept at connections and penetrations.

Appendix B 2.2.6/1

For faecal-free wastewater, type 2, 3 and 5 anti-flooding devices under DIN EN 13564-1:2002-10 must be used. For wastewater containing faecal matter, type 3 anti-flooding devices marked F under DIN EN 13564-1:2002-10 must be used.

Appendix B 2.2.6/2

Properties not within the scope of DIN EN 1433:2005-09, Sections 6.1, 6.3.3.2, 6.3.3.3 and 7.9 may be demonstrated for the use of drainage channels pursuant to DIN 19580:2010-7.

Appendix B 2.2.6/3

Properties not within the scope DIN EN 1916:2003-04, Table 1 may be demonstrated for the use of site drainage pipes and fittings pursuant to DIN V 1201:2004-08 or DIN V 1201:2004-08.

Appendix B 2.2.6/4

Properties not within the scope of DIN EN 1917:2003-04, Table 1 may be demonstrated for the use of site drainage manholes and inspection chambers pursuant to DIN V 4034-1:2004-08.

Appendix B 2.2.6/5

Pipes and fittings with corrosion protection coatings containing less than < 50 ppm benzo(a)pyrene may be used.

B 3 Technical building equipment and parts of systems for the storage, filling and handling of water-polluting substances that do not have the CE mark under the Construction Products Regulation

B 3.1 General

Technical building equipment and parts of systems for the storage, filling and handling of water-polluting substances that do not meet specific basic requirements under Article. 3(1) of the Construction Products Regulation for physical structures and parts thereof in respect of their intended use (and are subject to further harmonised legal areas).

For these products, proof of usability is required to demonstrate the main features missing under the prerequisites of § 17(1) MBO[1].

[1] Under state laws

B 3.2 Provisions pursuant to § 85a(2)(3)

B 3.2.1 Technical building equipment subject to requirements under other legislation

Item number	Construction product	Decisive harmonisation legislation	a: Specific purpose b: Basic requirement pursuant to MBO, with clarification where applicable c: Main features missing
1	2	3	4
B 3.2.1.1	Amalgam separators	2014/35/EU 2014/30/EU 93/42/EEC 2006/42/EC	a: Use in building drainage b: Hygiene, health, preservation of the environment c: Sealing, backflow prevention, odour sealing and sufficient separation rate
B 3.2.1.2	Septic tanks with motor drives	2014/35/EU 2014/30/EU 2006/42/EC	a: Use in building drainage b: Hygiene, health, preservation of the environment c: Sealing, backflow prevention, odour sealing and biological purification
B 3.2.1.3	Plants to limit heavy metals in wastewater from the manufacture of ceramic products and that are fitted with motor drives	2014/35/EU 2014/30/EU 2006/42/EC	a: Use in building drainage b.1: Hygiene, health, preservation of the environment b.2: Safety in use c.1: Sealing, limitation effect c.2: Operational reliability of measuring, control and regulation devices
B 3.2.1.4	Plants to limit substances capable of being filtered, arsenic, antimony, barium, lead and other heavy metals, designed for an intake of wastewater from the construction and processing of glass and artificial mineral fibres and fitted with motor drives	2014/35/EU 2014/30/EU 2006/42/EC	a: Use in building drainage b.1: Hygiene, health, preservation of the environment b.2: Safety in use c.1: Sealing, limitation effect c.2: Operational reliability of measuring, control and regulation devices
B 3.2.1.5	Plants to limit hydrocarbons in wastewater containing mineral oils fitted with motor drives	2014/35/EU 2014/30/EU 2006/42/EC	a: Use in building drainage b.1: Hygiene, health, preservation of the environment b.2: Safety in use c.1: Sealing, limitation effect c.2: Operational reliability of measuring, control and regulation devices
B 3.2.1.6	Plants to limit silver content in wastewater from photographic procedures fitted with motor drives	2014/35/EU 2014/30/EU 2006/42/EC	a: Use in building drainage b.1: Hygiene, health, preservation of the environment b.2: Safety in use c.1: Sealing, limitation effect c.2: Operational reliability of measuring, control and regulation devices
B 3.2.1.7	Plants to limit halogenated hydrocarbons in wastewater from dry cleaners fitted with motor drives	2014/35/EU 2014/30/EU 2006/42/EC	a: Use in building drainage b.1: Hygiene, health, preservation of the environment b.2: Safety in use c.1: Sealing, limitation effect c.2: Operational reliability of measuring, control and regulation devices
B 3.2.1.8	Fire dampers for ventilation ducts not within the scope of DIN EN 15650	2014/35/EU 2014/30/EU 2006/42/EC	a: Use in ventilation systems b: Fire protection c: Sealing, surface temperature, activation device and smoke alarms
B 3.2.1.9	Smoke dampers for ventilation ducts	2014/35/EU 2014/30/EU 2006/42/EC	a: Use in ventilation systems b: Fire protection c: Sealing, smoke alarm and closure when ancillary power supply is

[1] Under state laws

Draft

Item number	Construction product	Decisive harmonisation legislation	a: Specific purpose b: Basic requirement pursuant to MBO, with clarification where applicable c: Main features missing
1	2	3	4
			interrupted
B 3.2.1.10	Ventilation devices with a volume flow ≥ 1 000 m³/h	2014/35/EU 2014/30/EU 2006/42/EC 2009/125/EC Regulation (EU) No. 1253/2014 2010/30/EU Delegated Regulation (EU) No. 1254/2014	a: Aeration and ventilation of residential and non-residential buildings b.1: Fire protection b.2: Hygiene, health, preservation of the environment b.3: Energy saving and thermal insulation c.1: Reaction to fire c.2: Characteristic curve, minimum volume flow, sealing, air quality (filter), safety equipment c.3: Energy characteristics
B 3.2.1.11	Sealed solid-fuel furnaces with motor-operated parts	2014/35/EU 2014/30/EU 2006/42/EC	a: Room heating b.1: Hygiene, health, preservation of the environment b.2: Safety and accessibility in use b.3: Energy saving and thermal insulation c.1: CO concentration in waste gas, required draught c.2: Operational reliability for this mode of operation, self-closing combustion chamber doors, installation conditions c.3: Energy characteristics, minimum air requirement, sealing, energy characteristics (if the furnace is not used to heat individual rooms or groups of rooms, individual furnaces)
B 3.2.1.12	Sealed solid-fuel furnaces with motor-operated parts	2014/35/EU 2014/30/EU 92/42/EEC 2006/42/EC	a: Room heating b.1: Hygiene, health, preservation of the environment b.2: Safety and accessibility in use b.3: Energy saving and thermal insulation c.1: CO concentration in waste gas, required draught c.2: Operational reliability for this mode of operation, self-closing combustion chamber doors, installation conditions c.3: Minimum air requirement, sealing, energy characteristics
B 3.2.1.13	Quickly adjustable solid-fuel furnaces with motor-operated parts for individual rooms or groups of rooms (individual furnaces)	2014/35/EU 2014/30/EU 2006/42/EC	a: Room heating b.1: Hygiene, health, preservation of the environment b.2: Safety and accessibility in use b.3: Energy saving and thermal insulation c.1: CO concentration in waste gas, required draught c.2: Operational reliability for this mode of operation, switch-off time, fuel dosage, installation conditions c.3: Minimum air requirement, sealing
B 3.2.1.14	Oil- and gas-fired furnaces 4 kW up to 400 kW max.	Depending on Execution 2014/35/EU 2014/30/EU 2009/142/EC 92/42/EEC 97/23/EC *(from 19 July 2016: 2014/68/EU)* 2006/42/EC	a: Room heating b: Energy saving and thermal insulation c: Energy characteristics
B 3.2.1.15	Oil- and gas-fired furnaces < 4 kW and > 400 kW	Depending on Execution 2014/35/EU	a: Room heating b: Energy economy and heat retention: c: Energy characteristics

[1] Under state laws

Draft

Item number	Construction product	Decisive harmonisation legislation	a: Specific purpose b: Basic requirement pursuant to MBO, with clarification where applicable c: Main features missing
1	2	3	4
		2014/30/EU 2009/142/EC 97/23/EC *(from 19 July 2016: 2014/68/EU)* 2006/42/EC	
B 3.2.1.16	Assemblies for hot-water generation loaded by hand with solid fuels	97/23/EC *(from 19 July 2016: 2014/68/EU)*	a: Room heating b.1: Fire protection b.2: Hygiene, health, preservation of the environment b.3: Safety and accessibility in use b.4: Energy saving and thermal insulation c.1: Fire safety of furnaces c.2: Where necessary: hygienic combustion c.3: Safety in use of furnaces c.4: Energy characteristics
B 3.2.1.17	Boilers with motor drive for solid fuels	2014/35/EU 2014/30/EU 2006/42/EC	a: Room heating b.1: Hygiene, health, preservation of the environment b.2: Energy saving and thermal insulation c.1: Energy characteristics
B 3.2.1.18	Stand-alone safety equipment for ensuring safe joint operation of ventilation systems and atmospheric furnaces	2014/35/EU 2014/30/EU	a: Ensuring safe joint operation of ventilation systems (including ambient air extraction systems such as extractor hoods or tumble dryers) and atmospheric furnaces b.1: Hygiene, health, environmental protection: b.2: Safety and accessibility in use c.1: Prevention of dangerous underpressure in the furnace installation area during furnace operation c.2: Operational reliability
B 3.2.1.19	Electrical heat pumps	2014/35/EU 2014/30/EU 2009/142/EC 2006/42/EC	a: Energy generation for warming heating media and drinking water b: Energy economy and heat retention: c: Energy characteristics
B 3.2.1.20	Non-electrically operated heat pumps (sorption or motor-operated heat pumps)	Depending on Execution 2014/35/EU 2014/30/EU 2009/142/EC 97/23/EC *(from 19 July 2016: 2014/68/EU)* 2006/42/EC	a: Energy generation for warming heating media and drinking water b.1: Hygiene, health, preservation of the environment b.2: Energy saving and thermal insulation c.1: Energy characteristics
B 3.2.1.21	Thermal solar systems, prefabricated equipment and parts[9] excluding solar collectors pursuant to B 3.2.1.5.2.1 and B 3.2.1.5.2.2	Depending on the configuration 2014/35/EU 2014/30/EU 97/23/EC *(from 19 July 2016: 2014/68/EU)*	a: Energy generation for heating drinking water b.1: Hygiene, health, preservation of the environment b.2: Energy saving and thermal insulation c.1: Energy characteristics

[9] Only construction products which, at the manufacturer's choice, have better energetic parameters then those in accordance with DIN V 4701-10:2003-08, are subject to this regulation.

[1] Under state laws

Draft

Item number	Construction product	Decisive harmonisation legislation	a: Specific purpose b: Basic requirement pursuant to MBO, with clarification where applicable c: Main features missing
1	2	3	4
B 3.2.1.22	Solar collectors[9] with mechanically held glass cover areas with a maximum individual glazing area of up to 3.0 sqm for use: - in roof areas with angle of inclination ≥ 75°[10] - in building-independent solar systems in areas not open to the public	97/23/EC *(from 19 July 2016: 2014/68/EU)*	a: Energy generation for warming heating water b.1: Fire protection b.2: Energy economy and heat retention: c.1: Fire behaviour of components required to have low flammability or be non-combustible c.2: Energy characteristics
B 3.2.1.23	Solar collectors in derogation of B 3.2.1.22	97/23/EC *(from 19 July 2016: 2014/68/EU)*	a: Energy generation for warming heating water b.1: Mechanical resistance and stability b.2: Energy saving and thermal insulation c.1: Depending on the installation situation, the provisions of A 1.2.7 must be met. c.2: Energy characteristics
B 3.2.1.24	Solar cylinder[9]	97/23/EC *(from 19 July 2016: 2014/68/EU)*	a: Energy generation for warming drinking and heating water b.1: Hygiene, health, preservation of the environment b.2: Energy saving and thermal insulation c.1: Energy characteristics
B 3.2.1.25	Photovoltaic modules with mechanically held glass cover areas with a maximum individual module area of up to 2.0 m² for use: - in roof areas with angle of inclination < 75°[10] - in building-independent solar systems in areas not open to the public	2014/35/EU	a: Power generation for buildings b: Fire protection c: Fire behaviour of components required to have low flammability or be non-combustible
B 3.2.1.26	Photovoltaic modules without glass covers for use in roof areas	2014/35/EU	a: Power generation for buildings b: Fire protection c: Fire behaviour of components required to have low flammability or be non-combustible

[9] Only construction products which, at the manufacturer's choice, have better energetic parameters then those in accordance with DIN V 4701-10:2003-08, are subject to this regulation

[10] NB: When used in thoroughfares that could be endangered by falling glass parts (overhead glazing), the provisions of Section A 1.2.7 must be observed.

Item number	Construction product	Decisive harmonisation legislation	a: Specific purpose b: Basic requirement pursuant to MBO, with clarification where applicable c: Main features missing
1	2	3	4
B 3.2.1.27	Photovoltaic modules in derogation of B 3.2.1.25 or B 3.2.1.26	2014/35/EU	a: Power generation for buildings b.1: Mechanical resistance and stability b.2: Fire protection c.1: Fire behaviour of components required to have low flammability or be non-combustible c.2: Depending on the installation situation, the provisions of A 1.2.7 must be met
B 3.2.1.28	Drinking water reservoirs[9],	Depending on	a: Heating and storage of drinking water

[1] Under state laws

Draft

Item number	Construction product	Decisive harmonisation legislation	a: Specific purpose b: Basic requirement pursuant to MBO, with clarification where applicable c: Main features missing
1	2	3	4
	direct/indirect (electr./gas) heated and buffer reservoir[9]	Execution 2014/35/EU 2014/30/EU 2009/142/EC 97/23/EC *(from 19 July 2016: 2014/68/EU)* 2006/42/EC	b.1: Hygiene, health, preservation of the environment b.2: Energy saving and thermal insulation c.1: Energy characteristics
B 3.2.1.29	Combined heat and power plants, CHPs	Depending on Execution 2014/35/EU 2014/30/EU 2009/142/EC 97/23/EC *(from 19 July 2016: 2014/68/EU)* 2006/42/EC	a: Heating of heating water and power generation to heat buildings b.1: Hygiene, health, environmental protection: b.2: Energy economy and heat retention: c.1: Energy characteristics
B 3.2.1.30	District and local heat transfer stations	Depending on Execution 2014/35/EU 2014/30/EU 97/23/EC *(from 19 July 2016: 2014/68/EU)* 2006/42/EC	a: Energy transfer for heating buildings b.1: Hygiene, health, preservation of the environment b.2: Energy saving and thermal insulation c.1: Energy characteristics
B 3.2.1.31	Exhaust gas heat exchanger[11]	97/23/EC *(from 19 July 2016: 2014/68/EU)*	a: Heat recovery for heating buildings b.1: Fire protection b.2: Safety and accessibility in use b.3: Energy saving and thermal insulation c.1: Fire behaviour of exhaust gas heat exchanger c.2: Operational reliability of combustion plants with waste gas heat exchanger c.3: Energy characteristics
B 3.2.1.32	distribution box for electric circuit systems with functional integrity requirement in the event of fire	2014/35/EU 2014/30/EU 2006/42/EC	a: Use in electrical circuit systems b: Fire protection c: Functional integrity in the event of fire

[9] Only construction products which, at the manufacturer's choice, have better energetic parameters then those in accordance with DIN V 4701-10:2003-08, are subject to this regulation

[11] Laterally heating warm water as heat distribution medium

B 3.2.2 Parts of systems for the storage, filling and handling of water-polluting substances that are not subject to the requirements of other legal provisions

Item number	Construction product	Decisive harmonisation legislation	a: Specific purpose b: Basic requirement pursuant to MBO, with clarification where applicable c: Main features missing
1	2	3	4
B 3.2.2.1	Overfill protection for containers	2014/35/EU 2014/30/EU 2014/34/EU	a: Storage, filling and handling of water-polluting liquids b: Hygiene, health, preservation of the environment c: Operational reliability, visibility of

[1] Under state laws

Draft

Item number	Construction product	Decisive harmonisation legislation	a: Specific purpose b: Basic requirement pursuant to MBO, with clarification where applicable c: Main features missing
1	2	3	4
			alarm displays, corrosion resistance and fault indicators
B 3.2.2.2	Leakage indicators for containers and pipes[12]	2014/35/EU 2014/30/EU 2014/34/EU	a: Storage, filling and handling of water-polluting liquids b.1: Resistance and stability: b.2: Hygiene, health, preservation of the environment c.1: Monitoring room stability c.2: Suitability of leakage detection medium, corrosion resistance, consistency and sealing of monitoring room and operational reliability of leakage indicator
B 3.2.2.3	Leak detection systems[12]	2014/35/EU 2014/30/EU	a: Storage, filling and handling of water-polluting liquids b: Hygiene, health, preservation of the environment c: Operational reliability, visibility of alarm displays, corrosion resistance and fault indicators
B 3.2.2.4	Containers with overpressure compared to atmospheric pressure over 0.5 bars during normal operation	97/23/EC *(from 19 July 2016: 2014/68/EU)*	a: Storage, filling and handling of water-polluting liquids b.1: Resistance and stability b.2: Hygiene, health, preservation of the environment b.3: Safety in use (only for containers used to store, fill and handle water-polluting liquids with flashpoint ≥ 55 °C) c.1: Stability of monitoring room (only for double-walled containers) c.2: - Leak detection (only for containers with leak detection lining and double-walled containers) - Permeation (only for underground plastic containers) c.3: - Explosion resistance (only for containers without flame arrester equipment) - Electrostatic charging (only for containers without a device to discharge electrostatic charging)

[12] For leak detectors or leak detection systems there is a technical specification under Regulation (EU) No. 305/2011 for use in equipment for storing fuels with a flashpoint > 55 °C used to supply heating systems in buildings. The use of construction products already on the market is unaffected.

Item number	Construction product	Decisive harmonisation legislation	a: Specific purpose b: Basic requirement pursuant to MBO, with clarification where applicable c: Main features missing
1	2	3	4
B 3.2.2.5	Pipes, hoses, associated fittings, sealants, mountings for pipes with overpressure compared to atmospheric pressure over	97/23/EC *(from 19 July 2016: 2014/68/EU)*	a: Storage, filling and handling of water-polluting liquids b.1: Resistance and stability b.2: Hygiene, health, preservation of the environment

[1] Under state laws

Draft

Item number	Construction product	Decisive harmonisation legislation	a: Specific purpose b: Basic requirement pursuant to MBO, with clarification where applicable c: Main features missing
1	2	3	4
	0.5 bars during normal operation		b.3: Safety in use (only for pipes for facilities used to store, fill and handle water-polluting liquids with flashpoint ≥ 55 °C) c.1: Stability of monitoring room (only for double-walled pipes) c.2: - Leak detection (only for double-walled pipes) - Permeation (only for underground plastic pipes) c.3: Electrostatic charging (only for pipes without a device to discharge electrostatic charging)
B 3.2.2.6	Independently closing nozzles	2014/34/EU 2006/42/EC	a: Storage, filling and handling of water-polluting liquids b: Hygiene, health, environmental protection: c: Operational reliability
B 3.2.2.7	Coupling with emergency separating function (safety breaks) for flexible pipes with overpressure compared to atmospheric pressure over 0.5 bars	97/23/EC *(from 19 July 2016: 2014/68/EU)*	a: Storage, filling and handling of water-polluting liquids b.1: Hygiene, health, preservation of the environment b.2 Safety in use: c.1: Leakage amount c.2: Emergency separating function

B 3.2.3 Fire prevention accessories subject to requirements under other legislation

Item number	Construction product	Decisive harmonisation legislation	a: Specific purpose b: Basic requirement pursuant to MBO, with clarification where applicable c: Main features missing
1	2	3	4
B 3.2.3.1	Electrical cable systems with functional integrity requirement in the event of fire	2014/35/EU	a: Use in electrical circuit systems b: Fire protection c: Functional integrity under fire exposure

B 4 Construction products and designs subject to the requirements of other legal provisions for which legislation has been enacted under § 85(4a) MBO[1]

Identification/item No.	Designation	Measures/specifications pursuant to § 85a(2) MBO**Error! Bookmark not defined.**
1	2	3
B 4.1	**Technical requirements for mass-produced, stationary plants and parts of plants in storage, filling and handling plants used for handling water-polluting substances**	
B 4.1.1	- catch basins and collecting equipment as well as pre-fabricated parts for collecting basins and surfaces, - sealants for catch basins, collecting equipment, collecting basins and surfaces, - containers, - internal coatings and linings for containers and pipes, - pipes, associated fittings, sealants and mountings, and - safety equipment	Appendix B 4.1/1

[1] Under state laws

Identification/item No.	Designation	Measures/specifications pursuant to § 85a(2) MBO[Error! Bookmark not defined.]
1	2	3
B 4.2	**Technical requirements for the installation, operation and maintenance of plants with construction products for wastewater treatment**	
B 4.2.1	Plants with construction products for handling domestic and municipal wastewater (septic tanks)	Appendix B 4.2/1
B 4.2.2	Plants with construction products for handling wastewater with parts of light liquids of mineral origin (separator systems for light liquids) Plants with construction products for containing light liquids of mineral origin (separator systems for light liquids)	Appendix B 4.2/2 Appendix B 4.2/3
B 4.2.3	Plants with construction products for handling fatty wastewater (grease separators)	Appendix B 4.2/2 Appendix B 4.2/4

Appendix B 4.1/1

Under the requirements pertaining to water-polluting substances (chemicals and mixtures thereof), storage, filling and handling plants and construction products and designs used therein must also be resistant, impermeable to liquids and sealed over the period of chemical stress to ensure stability and usability. This applies equally to retrofitted storage, filling and handling plants. More specifically, the requirements also apply to welding and adhesive seams on seals and components with a sealing function and for pipe connections.

Storage, filling and handling plants that can be driven over must not lose their sealing and load-bearing function, taking into account the usage conditions (frequency of traffic, wheel materials) for as long as water-polluting substances are present.

The following actions must also inter alia be taken into account for the proof of stability:
Temperature, test and operating pressure or filling level, dead and fill load, traffic load, impact, wind, snow, earthquake (exceptional load), flooding, chemical stress due to environmental factors and due to the storage or filling medium (water-polluting substances).
Consequence class CC2 and reliability class RC2 pursuant to Appendix B of EN 1990 apply at a minimum.

Crack width control for concrete components in storage, filling and handling plants:

- uncoated components: $w_{cal} \geq 0.1$ mm
- cladded or coated components: crack width w matched with sealant performance

Execution class EXC 2 under DIN EN 1090-2 to welding seams of steel parts with a sealant function, along with compliance with the requirements for welding execution and traceability of materials.

Appendix B 4.2/1

Type approval is required for the use of plants with construction products for handling domestic and municipal wastewater (septic tanks). The subject matter is the usage provisions under consideration of the requirements under water legislation.

Appendix B 4.2/2

Evidence of plant load-bearing capacity and usability based on DIN 19901:2012-12 must be submitted in the form of static calculation or structural analysis in individual cases. The following must also be observed:

- For concrete containers with no inner lining/inner cladding, the penetration characteristics in concrete of grease or light liquids in wastewater must be taken into account.
- For plastic containers, the necessary characteristic values must be determined taking into account the medium, time and temperature impact for static calculation.

[1] Under state laws

Draft

Appendix B 4.2/3

The plants must be erected and operated in such a way that light liquids do not leak onto the soil or water. E DIN 1999-100:2014-10, Section 1 excluding paragraph 3 and 4, Section 2, Section 3, Section 5 excluding point 5.4, point 5.8 and point 5.10, Section 10, Section 11, Section 12, Section 13, Appendix A, Appendix B applies.

In derogation of E DIN 1999-100:2014-10, Section 5, point 5.7, the following requirements apply to cable ducts:

- Where factory-made cable ducts are not already available, they must be manufactured as follows: Cable ducts must be positioned above the highest operating liquid level, where applicable in the areas indicated by the manufacturer. They must not restrict accessibility. Suitable components must be used for cable ducts, with an opening installed the component (e.g. through core drilling) so that the separator system still meets the sealing requirement under E DIN 1999-100:2014-10, Appendix A after the cable duct has been installed.
- The requirements under DIN EN 858-1:2005-02, Section 6.2.5 apply to material requirements.
- After installation, the sealing of the plant under E DIN 1999-100:2014-10, Appendix A must be demonstrated.
- After replacing or changing a number and/or type of cable, the plant sealing must be demonstrated under E DIN 1999-100:2014-10, Appendix A.

In addition to E DIN 1999-100:2014-10, Section 11, point 11.1, volumes of additional fittings must be deducted when dimensioning sludge traps.

Separator systems for class I light liquid under DIN EN 858-1:2005-02, Section 4 must be used to use the plants with construction products to handle wastewater with parts of light liquids of mineral origin, whose pollutant load mainly originates from operating facilities in which wastewater containing mineral oil regularly accrues during removal, cleaning, servicing, maintenance and recovery of vehicles and parts thereof.

Appendix B 4.2/4

The plants must be erected and operated in such a way that grease does not leak onto the soil or water.

E DIN 4040-100:2014-10, Section 1, Section 2, Section 3, Section 4, excluding Section 4.2, Section 5 excluding point 5.4, point 5.6, point 5.8 and point 5.9, Section 9, Section 10, Section 11, Appendix A, Appendix B applies.

In derogation of E DIN 4040-100:2014-10, Section 5, point 5.7, the following requirements apply to cable ducts:

- Where factory-made cable ducts are not already available, they must be manufactured as follows: Cable ducts must be positioned above the highest operating liquid level, where applicable in the areas indicated by the manufacturer. They must not restrict accessibility. Suitable components must be used for cable ducts, with an opening installed the component (e.g. through core drilling) so that the plant still meets the sealing requirement under E DIN 4040-100:2014-10, Appendix A after the cable duct has been installed.
- The requirements under DIN EN 1825-1:2004-12, Section 5.2.6 apply to material requirements.
- After installation, the sealing of the plant under E DIN 4040-100:2014-10, Appendix A must be demonstrated.
- After replacing or changing a number and/or type of cable, the plant sealing must be demonstrated under E DIN 4040-100:2014-10, Appendix A.

When choosing the nominal size, the following requirements apply in addition to DIN EN 1825-2:2002-05, Section 6:
- Volumes of additional fittings must be deducted when dimensioning sludge traps.

In addition to the specifications of DIN EN 1825-1:2004-12, Section 5.5.3 the following apply:
- The minimum surface of the grease separator corresponds to the overall water surface less the surfaces of the inlet and outlet area and fittings. The minimum volume of the grease separator is the requisite full volume of the grease separator in water and stored grease, i.e. including the grease collection space but without the inlet and outlet areas. For mathematical proof, the minimum volume of the grease collection space should be assumed to have density of grease to be separated of 1.0 g/cm^3.

[1] Under state laws

C Technical Building Regulations for construction products that do not hear the CE mark

Prerequisites for issuing a certificate of conformity for construction products and details on designs and construction products that require only a general building inspectorate test certificate.

C 1 General

Construction products may only be used if during use the physical structure meets building inspectorate requirements.

To clarify the building inspectorate requirements with Technical Building Regulations, technical rules have been agreed with the highest state building inspectorate authorities which must be met (see § 85a MBO). These technical rules for construction products that do not have the CE mark under the Construction Products Regulation (Regulation (EU) No. 305/2011) are set out in Chapter C 2 column 3. The manufacturer must confirm compliance with these technical rules by issuing a compliance declaration and marking the construction products with the conformity mark [Übereinstimmungszeichen (Ü-Zeichen)]. Pursuant to § 85a(2)(5) MBO, Chapter C 2, column 4 sets out the requirements for issuing a compliance declaration by the manufacturer (§ 22 MBO) (ÜH, ÜHP or ÜZ).

Chapter C 2 sets out the regulations previously listed under Building Regulations List A Part 1.

Where construction products that do not have the CE mark under the Construction Products Regulation do not have technical approval and there are no generally accepted technical standards or where the construction product deviates significantly from a Technical Building Regulation, general building inspectorate approval (§ 18 MBO) or approval in individual cases (§ 20 MBO) is required.

Excluded from this are construction products listed in Chapter C 3 for which there are recognised test procedures in column 2 are excluded from this and which require only a general building inspectorate test certificate instead of general building inspectorate approval (§ 19 MBO). Pursuant to § 85a(2)(5) MBO, column 4 sets out the requirements for issuing a compliance declaration by the manufacturer in respect of the general building inspectorate test certificate.

Chapter C 3 sets out the regulations previously listed under Building Regulations List A Part 2.

Designs that deviate significantly from the Technical Building Regulations or for which there are no generally accepted technical standards in respect of planning, design and execution may only be used if there is general type approval or project-related type approval.

Excluded from this are designs listed in Chapter C 4 for which there are recognised test procedures (column 2) are excluded from this and which require only general type approval instead of general building inspectorate approval. The user must confirm compliance of the construction type with the general building inspectorate test certificate in a compliance declaration.

Chapter C 4 sets out the regulations previously listed under Building Regulations List A Part 3.

Under the principle of mutual recognition, a construction product that is not the subject matter of EU-wide harmonisation and has lawfully been placed on the market in another Member State of the European Union, of the European Economic Area, in Turkey or Switzerland under their national technical provisions qualifies as equivalent to a construction product under and on the basis of the requirements set out in Building Code[1], provided it is used as intended according to the other national technical provisions and meets the requirements applicable in Germany under and on the basis of the Building Code[1]. This includes requirements pertaining to the conformity assessment procedure and the conformity assessment bodies.

Draft

[1] Under state laws
[2] Under EAD/ETAG/CUAP

C 2 Requirements for submission of the compliance declaration for a construction product under § 22 MBO[1]

The following is ordered on the basis of § 85a(2)(5) MBO[1]:

C 2.1 Construction products for concrete and reinforced concrete construction

C 2.1.1 Binders
C 2.1.2 Concrete admixtures
C 2.1.3 Reinforcing steel
C 2.1.4 Concrete

Item number	Construction product	Technical rules	Certificate of compliance
1	2	3	4
C 2.1.1.1	Early setting cement (ES cement) and quick setting Portland and Portland composite cement (QS cement)[1]	DIN 1164-11:2003-11 Also applicable: Appendix C 2.1.1	ÜZ
C 2.1.1.2	Cement with an increased proportion of organic constituents	DIN 1164-12:2005-06	ÜZ
C 2.1.2.1	Trass	DIN 51043:1979-08	ÜZ
C 2.1.3.1	Reinforcing steel bars	DIN 488-2:2009-08 DIN 488-6:2010-01 Also applicable: DIN 488-1:2009-08	ÜZ
C 2.1.3.2	Reinforcing steel mesh	DIN 488-4:2009-08 DIN 488-6:2010-01 Also applicable: DIN 488-1:2009-08	ÜZ
C 2.1.3.3	Reinforcing steel in coils/steel wire	DIN 488-3:2009-08 DIN 488-6:2010-01 Also applicable: DIN 488-1:2009-08	ÜZ
C 2.1.3.4	Lattice girders	DIN 488-5:2009-08 DIN 488-6:2010-01 Also applicable: DIN 488-1:2009-08	ÜZ
C 2.1.4.1	Shotcrete[1]	DIN EN 14487-1:2006-03 Also applicable: DIN 18551:2014-08	ÜZ[13]
C 2.1.4.2	Standard concrete	DIN EN 206-1:2001-07, DIN EN 206-1/A1:2004-10, DIN EN 206-1/A2:2005-09 and DIN 1045-2:2008-08 Also applicable: DIN 1045-3: 2012-03 and DIN EN 1008:2002-10	ÜH

Draft

1 Under state laws

13 Only applies in the federal states of Bremen, Lower Saxony and Saarland (as at 30 August 2010). In the federal states where Orders concerning the requirements pertaining to manufacturers of construction products and users of designs, and those concerning the supervision of activities involving construction products and designs, have been enacted, the certificate of conformity [Übereinstimmungsnachweis (ÜZ)] is replaced by the inspection or monitoring performed by accredited centres in accordance with the Orders mentioned and the relevant standard.

C 2 Requirements for submission of the compliance declaration for a construction product under § 22 MBO[1]

C 2.1 Construction products for concrete and reinforced concrete construction

C 2.1.4 Concrete
C 2.1.5 Prefabricated concrete and reinforced concrete components, glass blocks and bricks

Item number	Construction product	Technical rules	Certificate of compliance
1	2	3	4
C 2.1.4.3	Concrete by properties, concrete by composition[1]	DIN EN 206-1:2001-07, DIN EN 206-1/A1:2004-10, DIN EN 206-1/A2:2005-09, DIN EN 206-9:2010-09 and DIN 1045-2:2008-08 Also applicable: DIN 1045-3:2012-03, DIN EN 1008:2002-10 and Annexes C 2.1.2 and 2.1.3 Also applicable, depending on construction product: DafStb Guideline for concrete with extended processing time (slow setting concrete) (2006-11), DafStb guideline on precautions against harmful alkali reactions in concrete (Alkali-Richlinie [Alikali Guideline]) – AlkR- (2013-10), DafStb Guideline for concrete in line with DIN EN 206-1 and DIN 1045-2 with recycled aggregates in line with DIN EN 12620: Part 1 - RBrezG/1 - (2010-09), DafStb Guideline for the production and usage of dry concrete and dry mortar (Trockenbeton-Richlinie [Dry Concrete Guideline]) - TrBMR - (2005-06), DafStb Guideline on self-compressing concrete - SVBR - (2012-09), DafStb Guideline on massive concrete components (2010-04) and DafStb Guideline on steel fibre reinforced concrete (2012-11)	ÜZ
C 2.1.4.4	Grout for pre-stressing tendons	DIN EN 447:1996-07 Also applicable: DIN EN 445:1996-07, DIN EN 446:1996-07 and Annexes C 2.1.4 and 2.1.5	ÜZ[13]
C 2.1.4.5	Grouting mortar, liquid concrete	DafStb guideline on the manufacture and use of cement-bound liquid concrete and grouting mortar - VeBMR - (2011-11)	ÜZ
C 2.1.5.1	Steps made of pre-cast reinforced concrete for stairs with suspension bolts[1]	DIN 18069:1985-11 Also applicable: Annexes C 2.1.5 and 2.1.6	ÜZ, also applies to non-serial production
C 2.1.5.2	Concrete windows	DIN 18057:2005-08 Also applicable: Appendix C 2.1.6	ÜZ
C 2.1.5.3	Statically active roof tiles with non-prefabricated carriers	DIN 4159:2014-05	ÜZ
C 2.1.5.4	Statically inactive roof tiles with non-	DIN 4160:2000-04	ÜHP

[1] Under state laws

[13] Only applies in the federal states of Bremen, Lower Saxony and Saarland (as at 30 August 2010). In the federal states where Orders concerning the requirements pertaining to manufacturers of construction products and users of designs, and those concerning the supervision of activities involving construction products and designs, have been enacted, the certificate of conformity [Übereinstimmungsnachweis (ÜZ)] is replaced by the inspection or monitoring performed by accredited centres in accordance with the Orders mentioned and the relevant standard.

Draft

C 2 Requirements for submission of the compliance declaration for a construction product under § 22 MBO[1]

C 2.1 Construction products for concrete and reinforced concrete construction

C 2.1.4 Concrete
C 2.1.5 Prefabricated concrete and reinforced concrete components, glass blocks and bricks

Item number	Construction product	Technical rules	Certificate of compliance
1	2	3	4
	prefabricated carriers	with the exception of the provisions concerning independent quality control inspection	
C 2.1.5.5	Load-bearing pre-cast products of concrete, reinforced concrete or pre-stressed concrete that do not meet the harmonised product standards.[1]	DIN 1045-4:2012-02 Also applicable: Appendix C 2.1.7	ÜZ, also applies to non-serial production
C 2.1.5.6	Prefabricated brick ceilings	DIN 1045-100:2011-12	ÜZ, also applies to non-serial production
C 2.1.5.7	Steel fibre reinforced concrete load-bearing units	DafStb Guideline for steel fibre reinforced concrete (2012-11), DIN 1045-4:2012-02 Also applicable: Appendix C 2.1.7	ÜZ, also applies to non-serial production

Draft

1 Under state laws

C 2 Requirements for submission of the compliance declaration for a construction product under § 22 MBO[1]

C 2.2 Construction products for masonry

Item number	Construction product	Technical rules	Certificate of compliance
1	2	3	4
C 2.2.1	Statically active bricks for cast slabs[1]	DIN 4159:2014-05 Also applicable: Appendix C 2.2.1	ÜZ
C 2.2.2	Façades and cast slabs	DIN 1053-4:2013-04	ÜZ, also applies to non-serial production

Draft

1 Under state laws

C 2 Requirements for submission of the compliance declaration for a construction product under § 22 MBO[1]

C 2.3 Timber construction products

C 2.3.1 Prefabricated building components
C 2.3.2 Brackets
C 2.3.3 Adhesives for load-bearing timber components

Item number	Construction product	Technical rules	Certificate of compliance
1	2	3	4
C 2.3.1.1	Glued load-bearing timber construction products under DIN 1052-10:2012-05, Sections 6.2 to 6.5 and 6.7, excluding construction products under item no. C 2.3.1.5[1]	DIN 1052-10:2012-05 Also applicable: Appendix C 2.3.1 Also applicable, depending on construction product: DIN 4102-4:1994-03, DIN 4102-4/A1:2004-11 and DIN 4102-22:2004-11 in conjunction with item no. A 2.2.1	ÜH
C 2.3.1.2	Load-bearing structures of laminated beams, glued laminated timber or laminated veneer softwood timber with punched metal plate fasteners	DIN 1052:2008-12 and DIN 1052/Corrigendum 1:2010-05 Also applicable, depending on construction product: DIN 4102-4:1994-03, DIN 4102-4/A1:2004-11 and DIN 4102-22:2004-11 in conjunction with item no. A 2.2.1	ÜZ, also applies to non-serial production
C 2.3.1.3	Glued composite parts of laminated timber that do not fall within the scope of DIN EN 14080, and cross-laminated timber	DIN 1052-10:2012-05 Also applicable, depending on construction product: DIN 4102-4:1994-03, DIN 4102-4/A1:2004-11 and DIN 4102-22:2004-11 in conjunction with item no. A 2.2.1	ÜZ
C 2.3.1.4	Non-glued wall, ceiling and roof elements lined or planked on both sides; e.g. panel elements in wooden frame houses built using the panel construction method	DIN 1052:2008-12 and DIN 1052/Corrigendum 1:2010-05 Also applicable, mutatis mutandis: Guideline on the monitoring of wall, ceiling and roof elements for wooden frame houses built using the panel construction method as per DIN 1052 Parts 1 to 3 (1992-06) Also applicable, depending on construction product: DIN 4102-4:1994-03, DIN 4102-4/A1:2004-11 and DIN 4102-22:2004-11 in conjunction with item no. A 2.2.1	ÜZ, also applies to non-serial production
C 2.3.1.5	Glued wall, ceiling and roof elements which are lined or planked on both sides; e.g. panel elements in wooden frame houses built using the panel construction method	DIN 1052-10:2012-05 Also applicable, mutatis mutandis: Guideline on the monitoring of wall, ceiling and roof elements for wooden frame houses built using the panel construction method as per DIN 1052 Parts 1 to 3 (1992-06) Also applicable, depending on construction product: DIN 4102-4:1994-03, DIN 4102-4/A1:2004-11 and DIN 4102-22:2004-11 in conjunction with item no. A 2.2.1	ÜZ, also applies to non-serial production
C 2.3.2.1	Rebars, threaded bars and steel bars with wood screw thread for timber construction[1]	DIN 1052-10:2012-05 Also applicable: Appendix C 2.3.2	ÜH
C 2.3.2.2	Brackets that do not fall within the scope of DIN EN 14592	DIN 1052-10:2012-05	ÜHP

1 Under state laws

Draft

C 2 Requirements for submission of the compliance declaration for a construction product under § 22 MBO[1]

C 2.3 Timber construction products

C 2.3.1 Prefabricated building components
C 2.3.2 Brackets
C 2.3.3 Adhesives for load-bearing timber components

Item number	Construction product	Technical rules	Certificate of compliance
1	2	3	4
C 2.3.3.1	Phenoplastics and aminoplastics of adhesive type I for glued load-bearing connections in and between wooden components[1]	DIN EN 301:2013-12, DIN 68141:2008-01 Also applicable: Appendix C 2.3.3	ÜHP

Draft

C 2 Requirements for submission of the compliance declaration for a construction product under § 22 MBO[1]

C 2.4 Construction products for metal construction

C 2.4.1 Non-alloy steel construction products
C 2.4.2 Forged steel construction products
C 2.4.3 Construction products made of casting materials
C 2.4.4 Stainless steel construction products

Item number	Construction product	Technical rules	Certificate of compliance
1	2	3	4
C 2.4.1.1	Bright steel[1]	DIN EN 10278:1999-12 Also applicable: DIN EN 10277-2:2008-06 and Annexes C 2.4.1 and 2.4.2	ÜHP
C 2.4.1.2	Bright equal angle square edged angle steel	DIN 59370:2008-06 Also applicable: DIN EN 10277-2:2008-06 and Annexes C 2.4.1, C 2.4.2 and C 2.4.3	ÜHP
C 2.4.1.3	Hot-rolled seamless non-alloy steel pipes for use in tank construction	DIN 1629:1984-10 Also applicable: Annexes C 2.4.2, C 2.4.3 and C 2.4.4	ÜHP
C 2.4.1.4	Cold rolled strip and sheet	DIN 1623:2009-05 Also applicable: Appendix C 2.4.2	ÜHP
C 2.4.1.5	Steel wire ropes	DIN 3051-4:1972-03 Also applicable: Appendix C 2.4.2	ÜHP
C 2.4.1.6	Hot-rolled sheet piling of non-alloy steels	DIN EN 10248-1:1995-08 Also applicable: Annexes C 2.4.2 and 2.4.3	ÜHP
C 2.4.1.7	Cold-formed sheet piling of non-alloy steels	DIN EN 10249-1:1995-08 Also applicable: Annexes C 2.4.2 and 2.4.3	ÜHP
C 2.4.2.1	Forged steel pieces[1]	DIN EN 10222-4:2001-12 DIN EN 10250-2:1999-12 Also applicable: Annexes C 2.4.2 and 2.4.5	ÜHP
C 2.4.3.1	Cast steel products[1]	DIN EN 10293:2015-04 DIN 18800-1:2008-11 Also applicable: Appendix C 2.4.2	ÜHP
C 2.4.4.1	Forged rustproof steel pieces for use in tank construction and steel chimneys[1]	DIN EN 10250-4:2000-02 DIN EN 10250-4 Corrigendum 1:2008-12 Also applicable: Annexes C 2.4.2 and 2.4.6	ÜZ
C 2.4.4.2	Flat products, rods and wires for use in steel chimneys	SEW 400, 7th edition (1997-02) Also applicable: Annexes C 2.4.2 and 2.4.7	ÜZ
C 2.4.4.3	Welded rustproof circular steel pipes for use in tank construction and steel chimneys	DIN EN 10296-2:2006-02 Also applicable: DIN 18800-7: 2008-11 and Annexes C 2.4.2, C 2.4.3, C 2.4.6 and C 2.4.8	ÜZ
C 2.4.4.4	Seamless rustproof steel circular pipes for use in tank construction and steel chimneys	DIN EN 10297-2:2006-02 Also applicable: Annexes C 2.4.2, C 2.4.3 and C 2.4.6	ÜZ

1 Under state laws

Draft

C 2 Requirements for submission of the compliance declaration for a construction product under § 22 MBO[1]

C 2.4 Construction products for metal construction

C 2.4.4 Stainless steel construction products
C 2.4.5 Fasteners (rivets, screws, bolts, nuts and washers), welding consumables, welding adjutants

Item number	Construction product	Technical rules	Certificate of compliance
1	2	3	4
C 2.4.4.5	Hot and cold rolled corrosion-resistant strip and sheet steels for use in tank construction and steel chimneys	DIN EN 10088-2:2005-09 Also applicable: Annexes C 2.4.2 and 2.4.6	ÜZ
C 2.4.4.6	Semi-finished products, rods, rolled wire, drawn wire, profile and bright steel corrosion-resistant steel products for use in tank construction and steel chimneys	DIN EN 10088-3:2005-09 Also applicable: Annexes C 2.4.2 and 2.4.6	ÜZ
C 2.4.4.7	Hot or cold rolled steel heat-resistant rustproof strip and sheet, hot or cold-formed rods, rolled wire and profiles of heat-resistant rustproof steel for use in steel chimneys	DIN EN 10095:1999-05 Also applicable: Annexes C 2.4.2 and 2.4.9	ÜZ
C 2.4.5.1	Square taper washers for U sections[1]	DIN 434:2000-04	ÜH
C 2.4.5.2	Square taper washers for I sections	DIN 435:2000-01	ÜH
C 2.4.5.3	Steel round head rivets with diameters of ≤ 10 mm	DIN 124:2011-03 Also applicable: Appendix C 2.4.10	ÜZ
C 2.4.5.4	Steel countersunk rivets	DIN 302:2011-03 Also applicable: Appendix C 2.4.10	ÜZ
C 2.4.5.5	Aluminium round head rivets	DIN 660:2012-01 Also applicable: Appendix C 2.4.10	ÜZ
C 2.4.5.6	Wedge-shaped square washers for HT screws on I profiles	DIN 6917:1989-10	ÜH
C 2.4.5.7	Wedge-shaped square washers for HT screws on U profiles	DIN 6918:1990-04	ÜH
C 2.4.5.8	Washers for steel structures	DIN 7989-1, -2:2001-04	ÜH
C 2.4.5.9	Threaded bars	DIN 976-1:2002-12 Also applicable: Appendix C 2.4.11	ÜZ
C 2.4.5.10	T-head bolts with square neck	DIN 186:2010-09 Also applicable: Appendix C 2.4.11	ÜZ
C 2.4.5.11	T-head bolts with double nib	DIN 188:2011-02 Also applicable: Appendix C 2.4.11	ÜZ
C 2.4.5.12	T-head bolts	DIN 261:1987-01 Also applicable: Appendix C 2.4.11	ÜZ

Draft

1 Under state laws

C 2 Requirements for submission of the compliance declaration for a construction product under § 22 MBO[1]

C 2.4 Construction products for metal construction

C 2.4.5 Fasteners (rivets, screws, bolts, nuts and washers), welding consumables, welding adjutants
C 2.4.6 Anti-corrosive agents and construction products which are protected against corrosion (without mechanical fasteners)

Item number	Construction product	Technical rules	Certificate of compliance
1	2	3	4
C 2.4.5.13	Eyebolts	DIN 444:1983-04 in conjunction with DIN EN 22340:1992-10 Also applicable: Appendix C 2.4.11	ÜZ
C 2.4.5.14	Anchor plates for T-head bolts	DIN 24539-2:1985-05	ÜHP
C 2.4.5.15	U-bolts	DIN 3570:1968-10 Also applicable: Appendix C 2.4.11	ÜZ
C 2.4.5.16	Steel round head rivets with diameters of < 10 mm[1]	DIN 660:2012-01 Also applicable: Appendix C 2.4.10	ÜZ
C 2.4.5.17	Turnbuckles made of tubular steel or round steel	DIN 1478:2005-09	ÜZ
C 2.4.5.18	Forged open-shape turnbuckle nuts	DIN 1480:2005-09	ÜZ
C 2.4.5.19	Welding ends for turnbuckles	DIN 34828:2005-09	ÜZ
C 2.4.5.20	Hexagonal turnbuckle nuts	DIN 1479:2005-09	ÜZ
C 2.4.5.21	Hot dip galvanised sets from high-strength hex bolts with large spanner sizes in sizes M 39 to M 72	DASt guideline 021 (2013-09) Also applicable: Appendix C 2.4.11, DIN EN 1090-2:2011-10 and DIN EN ISO 10684:2011-09	ÜZ
C 2.4.5.22	Hexagon socket countersunk head screws with strength class 8.8 and 10.9	DIN EN ISO 10642:2004-06 Also applicable: Appendix C 2.4.11	ÜZ
C 2.4.5.23	T-head bolts with large head	DIN 7992:2010-09 Also applicable: Appendix C 2.4.11	ÜZ
C 2.4.6.1	Steel and cast steel building components with thermally sprayed layers of zinc, aluminium and their alloys[1]	DIN EN ISO 2063:2005-05 Also applicable: Appendix C 2.4.12	ÜHP
C 2.4.6.2	Hot dip load-bearing building components of steel and cast steel (batch galvanising)	DASt guideline 022 (2009-08) Also applicable: Appendix C 2.4.13	ÜZ

Draft

1 Under state laws

C 2 Requirements for submission of the compliance declaration for a construction product under § 22 MBO[1]

C 2.5 Heat and sound insulating materials

Item number	Construction product	Technical rules	Certificate of compliance
1	2	3	4
C 2.5.1	In-situ foam produced from urea-formaldehyde (uf) resin for thermal insulation[1]	DIN 18159-2:1978-06 Also applicable: ETB directive on limiting formaldehyde emissions when using urea formaldehyde resin in-situ foam (1985-04) and DIN 4102-1:1998-05 DIN EN ISO 11925-2:2011-02 in conjunction with Appendix C 3.7 in accordance with A 2.2.1.2, Table 1.2.1	ÜZ

Draft

1 Under state laws

C 2 Requirements for submission of the compliance declaration for a construction product under § 22 MBO[1]

C 2.6 Doors and gates

Item number	Construction product	Technical rules	Certificate of compliance
1	2	3	4
C 2.6.1	Mineral fibreboard as inserts for fire doors[1]	DIN 18089-1:1984-01	ÜZ
C 2.6.2	Revolving and folding lift shaft doors for lifts in lift shafts with fire resistance class F 90 walls	DIN 18090:1997-01 Also applicable: Appendix C 2.6.1	ÜZ, also applies to non-serial production
C 2.6.3	Horizontal and vertical sliding doors for lifts in lift shafts with fire-resistant walls	DIN 18091:1993-07 Also applicable: Appendix C 2.6.1	ÜZ, also applies to non-serial production
C 2.6.4	Vertical sliding doors for small service lifts in lift shafts with fire resistance class F 90 walls	DIN 18092:1992-04 Also applicable: Appendix C 2.6.1	ÜZ, also applies to non-serial production
C 2.6.5	Mortise locks for fire/smoke protection doors	DIN 18250:2003-10	ÜZ
C 2.6.6	Door closers with a controlled closing-sequence - upper door closer with crank drive and spiral spring	DIN 18263-1:2015-04 Also applicable: Appendix C 2.6.2	ÜZ
C 2.6.7	Door closers with a controlled closing-sequence - swing door drive with self-closing function	DIN 18263-4:2015-04	ÜZ
C 2.6.8	Spring hinge and construction hinge for fire doors	DIN 18272:1987-08	ÜZ
C 2.6.9	Door handles for fire/smoke protection doors	DIN 18273:1997-12	ÜZ
C 2.6.10	Automatic sliding doors in escape routes	Guideline on automatic sliding doors in escape routes - AutSchR - (1997-12)	ÜHP
C 2.6.11	Electrical locking systems for doors in escape routes	Guideline on electrical locking systems for doors in escape routes - EltVTR - (1997-12)	ÜHP
C 2.6.12	Inner doors applicable to the requirements on sound insulation, with the exception of fire and smoke barriers.	Appendix C 2.6.3	ÜHP
C 2.6.13	Automatic door systems	DIN 18650-1, -2:2005-12 Also applicable: Item no. C 2.6.11	ÜHP
C 2.6.14	Electrically controlled locking mechanisms as per DIN EN 14637 for fire and smoke door assemblies [1]	Appendix C 2.6.4	-

Draft

1 Under state laws

C 2 Requirements for submission of the compliance declaration for a construction product under § 22 MBO[1]

C 2.7 Inventory

Item number	Construction product	Technical rules	Certificate of compliance
1	2	3	4
C 2.7.1	Guide bearings and restraint bearings with sliding surfaces steel to steel[1]	DIN 4141-13:2010-07 Also applicable: Appendix C 2.7.1	ÜZ

Draft

1 Under state laws

C 2 Requirements for submission of the compliance declaration for a construction product under § 22 MBO[1]

C 2.8 Special constructions

Item number	Construction product	Technical rules	Certificate of compliance
1	2	3	4
C 2.8.1	Roller shutter cases for heat and sound insulation requirements[1]	Guideline on roller shutter cases - RokR - (2016-07)	ÜHP
C 2.8.2	PVC-coated polyester fabric	DIN 18204-1:2007-05	ÜZ
C 2.8.3	Textile surface structures (sheets) for hangars and tents	DIN 18204-1:2007-05	ÜHP
C 2.8.4	Plastic gratings as per DIN 24537-3	Appendix C 2.8.1	-

Draft

1 Under state laws

C 2 Requirements for submission of the compliance declaration for a construction product under § 22 MBO[1]

C 2.9 Construction products for roofs and roof coverings, walls and wall coverings, as well as ceilings and ceiling linings and internal non-load-bearing dividing walls

Item number	Construction product	Technical rules	Certificate of compliance
1	2	3	4
C 2.9.1	Aerated concrete panels and aerated concrete precision building panels[1]	DIN 4166:1997-10 Also applicable: Appendix C 2.1.5	ÜH
C 2.9.2	Lightweight concrete cavity wall panels	DIN 18148:2000-10 with the exception of the provisions concerning independent quality control inspection Also applicable: Annexes C 2.1.5, C 2.1.6 and C 2.9.1	ÜH
C 2.9.3	Unreinforced lightweight concrete wall panels	DIN 18162:2000-10 with the exception of the provisions concerning independent quality control inspection Also applicable: Annexes C 2.1.6 and 2.9.2	ÜH
C 2.9.4	Concrete slabs for external wall cladding ventilated at rear	DIN 18516-5:2013-09	ÜHP
C 2.9.5	Wet-processed factory-produced mineral panels	DIN 18177:2012-11 Also applicable: Appendix C 2.9.3	ÜH

Draft

1 Under state laws

C 2 Requirements for submission of the compliance declaration for a construction product under § 22 MBO[1]

C 2.10 Construction products for construction sealing and roof sealing

Item number	Construction product	Technical rules	Certificate of compliance
1	2	3	4
C 2.10.1	Naked bitumen sheets[1]	DIN 52129:2014-11 Also applicable: DIN 52144:2014-11	ÜH
C 2.10.2	Elastomer joint tapes of average flammability for sealing joints in concrete	DIN 7865-1, -2:2015-02 Also applicable: Appendix C 2.10.1 and DIN 4102-1:1998-05 DIN EN ISO 11925-2:2011-02 in conjunction with Appendix C 3.7 in accordance with A 2.2.1.2, Table 1.2.1	ÜH
C 2.10.3	Average flammability jointing tapes of thermoplastic materials for sealing joints in in-situ concrete	DIN 18541-1, -2:2014-11 with the exception of the provisions concerning independent quality control inspection Also applicable: DIN 4102-1:1998-05 DIN EN ISO 11925-2:2011-02 in conjunction with Appendix C 3.7 in accordance with A 2.2.1.2, Table 1.2.1	ÜH
C 2.10.4	Average flammability adhesives and bituminous protective coatings for the waterproofing of buildings	DIN 18195-2: 2009-04, Table 1 Also applicable: DIN 4102-1:1998-05 DIN EN ISO 11925-2:2011-02 in conjunction with Appendix C 3.7 in accordance with A 2.2.1.2, Table 1.2.1	ÜH
C 2.10.5	Asphalt mastic and melted asphalt for structural waterproofing	DIN 18195-2: 2009-04, Table 3	ÜH
C 2.10.6	Spherical corrugated metal bands for structural waterproofing	DIN 18195-2: 2009-04, Table 5	ÜH

Draft

1 Under state laws

C 2 Requirements for submission of the compliance declaration for a construction product under § 22 MBO[1]

C 2.11 Glass construction products

Item number	Construction product	Technical rules	Certificate of compliance
1	2	3	4
C 2.11.1	Prefabricated safety barrier glazing[1]	DIN 18008-4:2013-07 with the exception of Annex A, Annex D (with load-bearing capacity determined by testing) and Annex E	ÜH
C 2.11.2	Heat-soaked thermally toughened soda-lime safety glass (ESG-H)	Technical Rule on provisions for the manufacture of heat-soaked thermally toughened soda-lime safety glass (ESG-H)	ÜZ
C 2.11.3	Prefabricated glazing designed to sustain human loads	DIN 18008-5:2013-07, with the exception of Annex A	ÜH

Draft

1 Under state laws

C 2 Requirements for submission of the compliance declaration for a construction product under § 22 MBO[1]

C 2.12 Construction products for site drainage

C 2.12.1 Pipes, fittings and sealants for conductors and ducts

Item number	Construction product	Technical rules	Certificate of compliance
1	2	3	4
C 2.12.1.1	Cold-processable plastic sealants for concrete drains and sewers[1]	DIN 4062:1978-09	ÜZ
C 2.12.1.2	Unplasticised polyvinyl chloride plastics piping systems for discharging waste within buildings	DIN EN 1329-1:2014-07 in conjunction with DIN CEN/TS 1329-2:2012-09 Also applicable: DIN 4102-1: 1998-05 and DIN 4102-4:1994-03, DIN EN ISO 11925-2:2011-02 in conjunction with Appendix C 3.7 in accordance with A 2.2.1.2, Table 1.2.1	ÜZ
C 2.12.1.3	Unplasticised polyvinyl chloride pipes, fittings and pipelines for non-pressure underground sewers and piping and for devices for storing and filling slurry, liquid manure and silage effluent	DIN EN 1401-1:2009-07 in conjunction with DIN CEN/TS 1401-2:2012-09 Also applicable: Appendix C 2.12.2	ÜZ
C 2.12.1.4	High-density polyethylene pipes and fittings for hot-water resistant waste and soil discharge systems inside buildings	DIN EN 1519-1:2000-01 in conjunction with DIN CEN/TS 1519-2:2012-05 Also applicable: DIN 4102-1: 1998-05 and DIN 4102-4:1994-03, DIN EN ISO 11925-2:2011-02 in conjunction with Appendix C 3.7 in accordance with A 2.2.1.2, Table 1.2.1	ÜZ
C 2.12.1.5	High-density polyethylene pipes and fittings for sewers and piping	DIN EN 12666-1:2011-11 in conjunction with DIN CEN/TS 12666-2:2012-11	ÜZ
C 2.12.1.6	Shafts and accessories of unplasticised polyvinylchloride (PVC-U), polypropylene (PP) and polyethylene (PE) for unpressurised underground drains and sewers	DIN EN 13598-1:2011-02 in conjunction with DIN CEN/TS 13598-3:2012-07	ÜZ
C 2.12.1.7	Manholes and inspection chambers of unplasticised polyvinylchloride (PVC-U), polypropylene (PP) and polyethylene (PE) for unpressurised underground drains and sewers	DIN EN 13598-2:2010-05 in conjunction with DIN CEN/TS 13598-3:2012-07	ÜZ
C 2.12.1.8	Chlorinated polyvinyl chloride plastics piping systems for discharging waste within buildings	DIN EN 1566-1:1999-12 in conjunction with DIN CEN/TS 1566-2:2012-09 Also applicable: DIN 4102-1: 1998-05 and DIN 4102-4:1994-03, DIN EN ISO 11925-2:2011-02 in conjunction with Appendix C 3.7 in accordance with A 2.2.1.2, Table 1.2.1	ÜZ
C 2.12.1.9	Glass fibre reinforced polyester resin pipes and fittings for underground sewers and piping and for devices for storing and filling	DIN EN 14364:2013-05 in conjunction with DIN CEN/TS 14632:2012-05	ÜZ

1 Under state laws

Draft

C 2 Requirements for submission of the compliance declaration for a construction product under § 22 MBO[1]

C 2.12 Construction products for site drainage

C 2.12.1 Pipes, fittings and sealants for conductors and ducts

Item number	Construction product	Technical rules	Certificate of compliance
1	2	3	4
	slurry, liquid manure and silage effluent		
C 2.12.1.10	Entry and control shafts from glass fibre reinforced thermosetting plastics (GFK) based on polyester resin (UP)[1]	DIN EN 15383:2014-02 in conjunction with CEN/TS 14632:2012-05	ÜZ
C 2.12.1.11	Fibre cement pipes and fittings for building drainage systems	DIN EN 12763:2000-10 Also applicable: Appendix C 2.1.5	ÜZ
C 2.12.1.12	Fibre cement pipes and moulded parts for drains	DIN EN 588-1:1996-11 Also applicable: DIN 19850-1: 1996-11 and Appendices C 2.1.5 and C 2.12.3	ÜZ
C 2.12.1.13	Fibre cement shafts for underground drains and sewers	DIN 19850-3:1990-11 Also applicable: Appendix C 2.1.6	ÜZ
C 2.12.1.14	Polypropylene plastics piping systems for discharging waste within buildings	DIN EN 1451-1:1999-03 in conjunction with DIN CEN/TS 1451-2:2012-05 Also applicable: DIN 4102-1: 1998-05 and DIN 4102-4:1994-03, DIN EN ISO 11925-2:2011-02 in conjunction with Appendix C 3.7 in accordance with A 2.2.1.2, Table 1.2.1	ÜZ
C 2.12.1.15	Acrylonitrile-butadiene-styrene plastics piping systems for discharging waste within buildings[1]	DIN EN 1455-1:1999-12 in conjunction with DIN CEN/TS 1455-2:2012-09 Also applicable: Appendix C 2.12.1 and DIN 4102-1: 1998-05 and DIN 4102-4:1994-03, DIN EN ISO 11925-2:2011-02 in conjunction with Appendix C 3.7 in accordance with A 2.2.1.2, Table 1.2.1	ÜZ
C 2.12.1.16	Styrene copolymer blends plastics piping systems for discharging waste within buildings	DIN EN 1565-1:1999-12 in conjunction with DIN CEN/TS 1565-2:2012-09 Also applicable: Appendix C 2.12.1 and DIN 4102-1: 1998-05 and DIN 4102-4:1994-03, DIN EN ISO 11925-2:2011-02 in conjunction with Appendix C 3.7 in accordance with A 2.2.1.2, Table 1.2.1	ÜZ
C 2.12.1.17	Unplasticised polyvinyl chloride plastics piping systems with structured-wall pipes for soil and waste discharge inside buildings	DIN EN 1453-1:2000-03 in conjunction with DIN 19531-10:1999-12 Also applicable: DIN 4102-1:1998-05, DIN EN ISO 11925-2:2011-02 in conjunction with	ÜZ

1 Under state laws

Draft

C 2 Requirements for submission of the compliance declaration for a construction product under § 22 MBO[1]

C 2.12 Construction products for site drainage

C 2.12.1 Pipes, fittings and sealants for conductors and ducts

Item number	Construction product	Technical rules	Certificate of compliance
1	2	3	4
		Appendix C 3.7 in accordance with A 2.2.1.2, Table 1.2.1	
C 2.12.1.18	Polypropylene waste pipes and fittings for underground drainage and sewerage	DIN EN 1852-1:2009-07 in conjunction with DIN SPEC 1020:2009-08	ÜZ
C 2.12.1.19	Plastics piping systems made from polypropylene with mineral modifiers for discharging waste outside buildings[1]	DIN EN 14758-1:2012-05 in conjunction with DIN CEN/TS 14758-2:2007-10 Also applicable: Appendix C 2.12.4	ÜZ
C 2.12.1.20	Plastic piping systems for pressureless underground drainage and sewage with profiled walls of polyvinylchloride (PVC-U), polypropylene (PP) and polyethylene (PE) - pipes and fittings with smooth inner and outer surfaces, pipe type A -	DIN EN 13476-2:2007-08 in conjunction with DIN CEN/TS 13476-4:2013-07	ÜZ
C 2.12.1.21	Plastic piping systems for pressureless underground drainage and sewerage with profiled walls of polyvinylchloride (PVC-U), polypropylene (PP) and polyethylene (PE) - pipes and fittings with smooth inner and profiled outer surfaces, pipe type B -	DIN EN 13476-3:2009-04 in conjunction with DIN CEN/TS 13476-4:2013-07	ÜZ
C 2.12.1.22	Pipes and fittings of polyester resin moulding materials for underground drainage and sewerage	DIN EN 14636-1:2010-04 Also applicable: Appendix C 2.12.5	ÜZ

Draft

1 Under state laws

C 2 Requirements for submission of the compliance declaration for a construction product under § 22 MBO[1]

C 2.12 Construction products for site drainage

C 2.12.1 Pipes, fittings and sealants for conductors and ducts
C 2.12.2 Sanitary appliances and shut-off devices

Item number	Construction product	Technical rules	Certificate of compliance
1	2	3	4
C 2.12.1.23	Manholes and inspection chambers of polyester resin moulding materials for non-pressure underground drainage and sewerage	DIN EN 14636-2:2010-04 Also applicable: Appendix C 2.12.5	ÜZ
C 2.12.1.24	Semi-finished products for close-fit-lining for the renovation of underground drain networks (open channels)	DIN EN ISO 11296-3:2011-07 Also applicable: Appendix C 2.12.6	ÜZ
C 2.12.1.25	Semi-finished products for cured-in-place lining for the renovation of underground drain networks (open channels)	DIN EN ISO 11296-4:2011-07 Also applicable: Appendix C 2.12.6	ÜZ
C 2.12.1.26	Semi-finished products for the winding tube for the renovation of underground drain networks (open channels)	DIN EN ISO 11296-7:2013-05 Also applicable: Appendix C 2.12.6	ÜZ
C 2.12.1.27	Semi-finished product for lining with firmly anchored plastic linings for the renovation of underground drain networks (open channels)[1]	DIN EN 16506:2014-12 Also applicable: Appendix C 2.12.6	ÜZ
C 2.12.2.1	Drainage fittings for sanitary appliances[1]	DIN EN 274-1, -2, -3:2002-05 with the exception of the provisions concerning independent quality control inspection	ÜHP
C 2.12.2.2	Urinal connecting piece	DIN 1380:2001-05	ÜHP
C 2.12.2.3	Toilet connecting piece	DIN 1389:2001-05	ÜHP
C 2.12.2.4	Odour trap for specific purposes	DIN 19541:2004-12 with the exception of the provisions concerning independent quality control inspection	ÜHP
C 2.12.2.5	Outlets for buildings	DIN EN 1253-1:2003-09 Also applicable: DIN EN 1253-4:2000-02	ÜHP
C 2.12.2.6	Gullies with light liquids closure	DIN EN 1253-5:2004-03 in conjunction with DIN EN 1253-3:1999-06 with the exception of the provisions concerning independent quality control inspection Also applicable: DIN 4102-1: 1998-05 and DIN 4102-4:1994-03, DIN EN ISO 11925-2:2011-02 in conjunction with Appendix C 3.7 in accordance with A 2.2.1.2, Table 1.2.1	ÜHP

Draft

1 Under state laws

C 2 Requirements for submission of the compliance declaration for a construction product under § 22 MBO[1]

C 2.13 Technical building equipment

Item number	Construction product	Technical rules	Certificate of compliance
1	2	3	4
C 2.13.1	Electrical heat pumps[14]	DIN V 4701-10:2003-08 Also applicable: Appendix C 2.13.1	ÜHP
C 2.13.2	Thermal solar energy systems, prefabricated equipment and parts[14]	DIN V 4701-10:2003-08 Also applicable: Appendix C 2.13.2	ÜHP
C 2.13.3	Solar collectors[14]	DIN V 4701-10:2003-08 Also applicable: Appendix C 2.13.3	ÜHP
C 2.13.4	Solar cylinder[14]	DIN V 4701-10: 2003-08 Also applicable: Appendix C 2.13.4	ÜHP
C 2.13.5	Drinking water containers[14], direct/indirect (electr./gas) heated and buffer reservoir	DIN V 4701-10: 2003-08 Also applicable: Appendix C 2.13.5	ÜHP
C 2.13.6	Ventilation appliances as per DIN 4719	Appendix C 2.6.4	-

Draft

[1] Under state laws

[14] Only construction products which, at the manufacturer's choice, have better energetic parameters then those in accordance with DIN V 4701-10:2003-08, are subject to this regulation.

C 2 Requirements for submission of the compliance declaration for a construction product under § 22 MBO[1]

C 2.14 Firing systems

C 2.14.1 Fireplaces and firing equipment
C 2.14.2 Flues

Item number	Construction product	Technical rules	Certificate of compliance
1	2	3	4
C 2.14.1.1	Oil-fired heating units with vapourising burners	DIN 4731:1989-07 Also applicable: Appendix C 2.14.1	ÜHP
C 2.14.1.2	Oil-fired stoves with vapourising burners	DIN 4732:1990-01 Also applicable: Appendix C 2.14.1	ÜHP
C 2.14.1.3	Oil-fired storage water heaters with vapourising burners	DIN 4733:1990-01 Also applicable: Appendix C 2.14.1	ÜHP
C 2.14.1.4	Coal-fired storage water heaters	DIN 18889:1956-11 Also applicable: Appendix C 2.14.1	ÜHP
C 2.14.1.5	Boilers with motor drive for solid fuels[14]	DIN V 4701-10:2003-08	ÜHP
C 2.14.1.6	Oil- and gas-fired furnaces[14] 4 to max. 400 kW	DIN V 4701-10: 2003-08 Also applicable: Appendix C 2.14.2	ÜHP
C 2.14.1.7	Oil- and gas-fired furnaces[14] < 4 kW and > 400 kW	DIN V 4701-10: 2003-08 Also applicable: Appendix C 2.14.3	ÜHP
C 2.14.1.8	Sealed fireplaces as per DIN 18897	Appendix C 2.6.4	-
C 2.14.1.9	Boilers without motor drive for solid fuels	DIN EN 303-5:2012-10 and for the energetic parameters DIN V 4701-10:2003-08[3]	ÜHP
C 2.14.2.1	Draught regulator for house chimneys without motor drive	DIN 4795:1991-04	ÜHP
C 2.14.2.2	Elastomeric sealants for chimneys	DIN EN 14241-1:2013-11 Also applicable: Appendix C 2.14.4, DIN 4102-1:1998-05, DIN EN ISO 11925-2:2011-02 in conjunction with Appendix C 3.7 in accordance with A 2.2.1.2, Table 1.2.1	ÜZ

[1] Under state laws

[14] Only construction products which, at the manufacturer's choice, have better energetic parameters then those in accordance with DIN V 4701-10:2003-08, are subject to this regulation.

Draft

C 2 Requirements for submission of the compliance declaration for a construction product under § 22 MBO[1]

C 2.15 Construction products for stationary facilities for the storage, filling and handling of water polluting materials

Item number	Construction product	Technical rules	Certificate of compliance
1	2	3	4
C 2.15.1	Horizontal containers (tanks) from steel, single-walled, for the underground storage of water-polluting liquids[1]	DIN 6608-1:1989-09 Also applicable: Appendices C 2.15.1, C 2.15.2 and C 2.15.3	ÜZ
C 2.15.2	Horizontal containers (tanks) from steel, double-walled, for the underground storage of water-polluting liquids	DIN 6608-2:1989-09 Also applicable: Appendices C 2.15.1, C 2.15.2 and C 2.15.3	ÜZ
C 2.15.3	Horizontal cylindrical single-wall and double-wall steel containers (tanks) for the surface storage of water-polluting liquids that are not liquid fuels for the energy supply of heating and cooling systems for buildings or for the storage of water-polluting fuels with density > 1.0 kg/l and/or flashpoint ≥ 55°C for the energy supply of heating and cooling systems for buildings	DIN 6616:1989-09 Also applicable: Appendices C 2.15.3 and C 2.15.4	ÜZ
C 2.15.4	Vertical steel containers (tanks), single-walled, with volume less than 1 000 litres for the overground storage of water-polluting liquids	DIN 6623-1:1989-09 Also applicable: Annexes C 2.15.1, C 2.15.3 and C 2.15.5	ÜZ
C 2.15.5	Vertical steel containers (tanks), double-walled, with volume less than 1 000 litres for the overground storage of water-polluting liquids	DIN 6623-2:1989-09 Also applicable: Annexes C 2.15.1, C 2.15.3 and C 2.15.5	ÜZ
C 2.15.6	Steel horizontal containers (tanks), single-walled, with volume from 1 000 to 5 000 litres for the overground storage of water-polluting liquids	DIN 6624-1:1989-09 Also applicable: Annexes C 2.15.1, C 2.15.3 and C 2.15.5	ÜZ
C 2.15.7	Steel horizontal containers (tanks), double-walled, with volume from 1 000 to 5 000 litres for the overground storage of water-polluting liquids	DIN 6624-2:1989-09 Also applicable: Annexes C 2.15.1, C 2.15.3 and C 2.15.5	ÜZ
C 2.15.8	Single-walled prefabricated containers with flat walls and floors for the overground storage of water-polluting liquids with flashpoint > 55 °C[1]	DIN 6625-1, -2:2013-06 Also applicable: Appendix C 2.15.6	ÜZ
C 2.15.9	Single-walled shipping containers used as collection or dispensing containers that are design-approved under the traffic regulations for the carriage of dangerous goods	TRbF 20 (2001-04), Annex J Also applicable: Appendix C 2.15.7	ÜH
C 2.15.10	Single-walled metallic shipping containers used as collection or dispensing containers that are not design-approved under the traffic regulations for the carriage of dangerous goods	TRbF 20 (2001-04), Annex J Also applicable: Appendix C 2.15.8	ÜZ

1 Under state laws

Draft

C 2 Requirements for submission of the compliance declaration for a construction product under § 22 MBO[1]

C 2.15 Construction products for stationary facilities for the storage, filling and handling of water polluting materials

Item number	Construction product	Technical rules	Certificate of compliance
1	2	3	4
C 2.15.11	Single-walled metallic shipping containers used as stationary storage containers that are design-approved under the traffic regulations for the carriage of dangerous goods	TRbF 20 (2001-04), Annex M for water-polluting liquids with flashpoint ≥ 55 °C; TRbF 20 (2001-04), Annex N for water-polluting liquids with flashpoint > 55 °C; Also applicable: Appendix C 2.15.3	ÜH
C 2.15.12	Steel collecting trays and collection tanks with up to 1 000 l capacity	Guideline on the requirements for steel collecting trays with a volume of up to 1 000 litres (StawaR) - (September 2011)	ÜHP
C 2.15.13	Single-walled metallic pipes, related fittings, sealant, mountings for pipes in plants used for storing water-polluting liquids, except for components for oil supply systems for oil burners	TRbF 50 (2002-06), Annex A Also applicable: Annexes C 2.15.3, C 2.15.9 and C 2.15.10	ÜH
C 2.15.14	Vertical prefabricated cylindrical metallic flat-bottomed metallic containers with rigid roofs for the overground storage of liquids or cooled gases	DIN 4119-1: 1979-06 and DIN 4119-2:1980-02 in conjunction with The Adapting Guideline for Steel Construction (1998-10) with amendments and supplements (2001-12) Also applicable: Appendix C 2.15.3	ÜZ
C 2.15.15	Ceramic tiles as prefabricated parts for collecting basins and areas with waterproof layers[1]	Agl Data sheet S 10 Part 3 (2001-09) Also applicable: Appendix C 2.15.11	ÜH
C 2.15.16	Concrete used as sealant for drainage channels and surfaces	DIN 1045-2:2008-08 in conjunction with DIN EN 206-1:2001-07, DIN EN 206-1/A1:2004-10, DIN EN 206-1/A2:2005-09 Also applicable: DIN 1045-3:2012-03 in conjunction with DIN EN 13670:2011-03, DafStb Guideline "Concrete construction when handling water-endangering substances (BUmwS)", Part 2 (2011-03), DafStb Guideline for steel fibre reinforced concrete (2012-11) and Appendix C 2.15.12	ÜZ
C 2.15.17	Steel dome shaft	DIN 6626:1989-09	ÜHP
C 2.15.18	Steel dome shaft collar for brick dome shafts	DIN 6627:1989-09	ÜHP
C 2.15.19	Waterstops for sealing working and movement joints in in-situ concrete sealing constructions	DafStb Guideline on concrete construction when handling water-polluting materials (BuUmwS) (2011-03), Part 1 Sections 7.3.3(1) to (3) and (6) to (12), Part 2 Section 3.4(1) and (5) Also applicable: Appendix C 2.15.13	ÜH

1 Under state laws

Draft

C 2 Requirements for submission of the compliance declaration for a construction product under § 22 MBO[1]

C 2.15 Construction products for stationary facilities for the storage, filling and handling of water polluting materials

Item number	Construction product	Technical rules	Certificate of compliance
1	2	3	4
C 2.15.20	Hoses, related fittings, sealant, mountings for pipes in plants used for storing, filling and handling water-polluting substances	TRbF 50 (2002-06), Annex B Also applicable: Appendix C 2.15.9	ÜH
C 2.15.21	Single-walled metallic shipping containers used as collecting containers for waste oil and other waste materials that are design-approved under the traffic regulations for the carriage of dangerous goods	TRbF 20 (2001-04), Annex K	ÜH
C 2.15.22	Oil production units, control and safety equipment for oil supply systems for oil burners	DIN EN 12514-1:2000-05 Also applicable: Appendix C 2.15.14	ÜHP
C 2.15.23	Structural components, mountings, pipes, filters, oil de-aerators, meters for oil supply systems for oil burners	DIN EN 12514-2:2000-05 Also applicable: Annexes C 2.15.14 and C 2.15.15	ÜHP
C 2.15.24	Lining and grouting mastics and mortars for ceramic tiles for collecting basins and areas with waterproof layers	AGI Data sheet S 10 Part 3 (2001-09) Also applicable: Appendix C 2.15.16	ÜH
C 2.15.25	Leak detectors for under- and overpressure systems for storing water-polluting liquids[15]	Appendix C 2.15.17	ÜHP
C 2.15.26	Leak detectors for liquid systems for storing water-polluting liquids[15]	Appendix C 2.15.18	ÜHP
C 2.15.27	Concrete formwork blocks for silage silos and slurry tanks in biogas storage and filling systems	DIN 11622-22:2015-09 Also applicable: Annexes C 2.1.5 and 2.1.6	ÜZ

[1] Under state laws

[15] Excluded from this are leak detectors for equipment for storing fuels used to supply heating systems in buildings

Draft

C 2 Requirements for submission of the compliance declaration for a construction product under § 22 MBO[1]

C 2.16 Scaffolding components[16]

Item number	Construction product	Technical rules	Certificate of compliance
1	2	3	4
C 2.16.1	Adjustable steel telescopic piles with mathematically determined load-bearing capacity[15]	DIN EN 1065:1998-12 Also applicable: Appendix C 2.16.1	ÜZ
C 2.16.2	System-independent steel pipes for use in falsework and working scaffolding	DIN EN 39:2001-11 Also applicable: Appendix C 2.16.2	ÜHP
C 2.16.3	Lightweight scaffold spindles	DIN 4425:1990-11 with the exception of the provisions concerning independent quality control inspection Also applicable: Annexes C 2.16.2 and C 2.16.3	ÜHP
C 2.16.4	Couplings	DIN EN 74-1:2005-12 Also applicable: Annexes C 2.16.2 and C 2.16.4	ÜZ
C 2.16.5	Welded circular pipes of non-alloy steel for use on falsework[5]	DIN 1626:1984-10 Also applicable: Annexes C 2.4.2, C 2.4.3, C 2.16.2 and C 2.16.5	ÜHP
C 2.16.6	Timber scaffolding boards and beams for use on protective scaffolding[1]	DIN 4420-1:2004-03 Also applicable: Appendix C 2.16.2	ÜH
C 2.16.7	Pre-assembled steel, aluminium and wooden scaffolding parts	DIN EN 12812:2008-12 Also applicable: Annexes C 2.16.2 and C 2.16.6	ÜH
C 2.16.8	Hot-rolled seamless non-alloy steel pipes for use on falsework	DIN 1629:1984-10 Also applicable: Annexes C 2.4.2, C 2.4.3, C 2.16.2 and C 2.16.7	ÜHP
C 2.16.9	Cast steel products for use on falsework	DIN EN 10293:2015-04 Also applicable: Annexes C 2.4.2, C 2.16.2 and C 2.16.8	ÜHP
C 2.16.10	Industrially produced timber formwork beams[5]	DIN EN 13377:2002-11 in conjunction with DIN 20000-2:2013-12	ÜZ
C 2.16.11	Base plates and centre bolts	DIN EN 74-3:2007-07 and DIN EN 74-3/Corrigendum 1:2007-10 Also applicable: Appendix C 2.16.2	ÜH
C 2.16.12	Special couplers	DIN EN 74-2:2009-01 Also applicable: Annexes C 2.16.2, C 2.16.9 and C 2.16.10	ÜZ
C 2.16.13	Adjustable aluminium telescopic piles[1]	DIN EN 16031:2012-09 Also applicable: Appendix C 2.16.10	ÜZ
C 2.16.14	Load-bearing structures of solid softwood timber with punched metal plate fasteners	DIN 1052:2008-12 and DIN 1052/Corrigendum 1:2010-05	ÜZ, also applies to non-serial production

[1] Under state laws

[16] This Chapter does not apply in the Free State of Bavaria

Draft

C 2 Requirements for submission of the compliance declaration for a construction product under § 22 MBO[1]

C 2.16 Scaffolding components[16]

Item number	Construction product	Technical rules	Certificate of compliance
1	2	3	4
C 2.16.15	Pre-assembled steel, aluminium and timber scaffolding parts, except for standard components, hatch panels and console coatings[1]	DIN EN 12811-1:2004-03 Also applicable: Appendix C 2.16.11	ÜZ
C 2.16.16	Castings of non-alloy and low-grade spheroidal graphite cast iron for use on falsework	DIN EN 1563:2003-02 Also applicable: Annexes C 2.4.2, C 2.16.2 and C 2.16.12	ÜHP
C 2.16.17	Malleable castings for use on falsework[5]	DIN EN 1562:2006-008 with the exception of the provisions of Annex ZA Also applicable: Annexes C 2.4.2, C 2.16.2 and C 2.16.13	ÜHP

Draft

1 Under state laws

16 This Chapter does not apply in the Free State of Bavaria

Annexes C 2

Appendix C 2.1.1

Fast-setting cement for load-bearing parts may only be used if they meet the requirements on the general properties of the main cement types of CEM I or CEM II as per DIN EN 197-1:2011-11, Section 4, with the exception of setting times.

The manufacturer must specify the type and percentage of (cement) additives as per DIN 1164-11:2003-11, Section 5 to the certification body.

Appendix C 2.1.2

In derogation of DIN 1045-2:2008-08, Annex F, Table F.2.1, concrete for bridge caps that are laden with de-icing salt may be manufactured with a maximum water/cement ratio of 0.50 in exposure class XD3. In derogation of Tables F.2.1 and F.2.2, in exposure classes XD3 and XF4, the minimum compressive strength class of the air entrained concrete after 28 days is C25/30.

In derogation of DIN 1045-2:2008-08, Section 5.3, Tables F.2.1 and F.2.2, in exposure classes XD2, XS2, XF2, XF3 or XA2, as regards structural members of road bridges, tunnels and frames, the minimum compressive strength class of the concrete after 28 days is C30/37.

Appendix C 2.1.3

1 Re DIN 1045-2:2008-08

1.1 Section 5.1.1:
To be supplemented as follows: “The general suitability of starting materials for use in concrete in accordance with DIN EN 206-1 is determined through European technical approvals or assessments. Specific suitability in terms of durability under this standard is not demonstrated."

1.2 Section 5.1.2:
To be amended as follows: "As suitable cement in line with DIN EN 197-1, DIN 1164-10, DIN 1164-11, DIN 1164-12 and DIN EN 14216."

1.3 Section 5.1.6:
To be supplemented as follows: "As regards ground granulated blast furnace slag as per DIN EN 15167-1, proof of suitability as a type II additive is regarded as having been furnished."

1.4 Section 5.2.3.4:
To be supplemented as follows: "The alkali reactivity class of aggregates under DIN EN 12620 under the DafStb Alkali Guideline can be taken from the declaration of performance.”

1.5 Section 5.2.3.5:
The paragraph is replaced by: "As regards the use of recycled aggregates as per DIN EN 12620:2008-07, DafStb Guideline for concrete as per DIN EN 206-1 and DIN 1045-2 with recycled aggregates as per DIN EN 12620 must be observed."

1.6 Section 5.2.5.1:
To be supplemented as follows: "Suitability of the k-value approach is regarded as having been demonstrated for ground granulated blast furnace slag."
The following shall be added after paragraph 8: “Only silicate dusts with a class 1 silica content may be used.”

1.7 Re Section 5.2.5.2.1:
To be supplemented as follows: “As regards application of the k-value approach to ground granulated blast furnace slag, the stipulations under DIN 1045-2, 5.2.5.2.2 apply to fly ash, mutatis mutandis. The lowering of the minimum cement content and making allowances for the water/cement ratio are <u>not</u> permitted with regard to the exposure classes XF2 and XF4.
The simultaneous use of ground granulated blast furnace slag and fly ash and/or silicate dust is <u>not</u> permitted.”

1.8 Re Section 5.2.5.2.2:
To be supplemented as follows: “As regards the maximum quantity of ground granulated blast furnace slag h which may be included in the water/cement ratio, the condition h/z (ratio of ground granulated blast furnace slag to cement) ≥ 0.33 % by mass can be applied in the case of all cements pursuant to 5.2.5.2.2.

In the case of cements with the main constituent D, a quantity of ground granulated blast furnace slag in excess of h/z = 0.15 may be used.

Draft

The provisions under 5.2.5.2.2 concerning fly ash used in the production of concrete with a high sulfate resistance may not be applied to ground granulated blast furnace slag."

To be amended as follows: "NOTE The requirements for HS cement are met for CEM I-SR 0, CEM I-SR 3, CEM III/B-SR and CEM III/C-SR under DIN EN 197-1:2011-11."

To be supplemented as follows: The provisions under 5.3.4 regarding the use of fly ash in underwater concrete do not apply to ground granulated blast furnace slag."

1.9 Table F.3.1
Table heading:

To be amended as follows: "Areas of application for cement under DIN EN 197-1, DIN 1164-11, DIN 1164-12 and FE cements as well as CEM I-SE and CEM II-SE under DIN 1164-11 to manufacture concrete in accordance with DIN 1045-2"

Footnote d:

To be amended as follows: "NOTE The requirements for HS cement are met for CEM I-SR 0, CEM I-SR 3, CEM III/B-SR and CEM III/C-SR under DIN EN 197-1:2011-11."

2 Re the Alkali Guideline- AlkR - (2013-10)

Section 7.1.1:
To be supplemented as follows: "The manufacturer must declare compliance with DIN 1164-10 for cement with low effective alkali content."

Appendix C 2.1.4
The following is to be observed when applying the technical rules:

1 The pre-stressing tendons should be grouted with a Portland concrete grout CEM I in line with DIN EN 197-1:2011-11 or DIN 1164-10:2013-03, water and a pressing aid in line with DIN EN 934-4:2009-09 or with general building inspectorate approval. The use of pressing aids must be in line with DIN V 20000-101:2002-11. The corrosion behaviour can be proved also in line with DIN EN 934-1, alternatively to DIN V 20000-101:2002-11, Section 7. The use of other grouts requires general building inspectorate approval.

2 Re DIN EN 445: 1996-07

2.1 Re Section 2:

The most recent date of issue "DIN EN 196-1:2005-05" must be cited.

2.2 Section 3.2.2.3:

The final sentence "Two ... must be performed." shall be replaced by the following sentences: "Three tests must be carried out; the first test shall be conducted immediately after the grout has been mixed, with the two remaining tests performed 30 minutes after mixing. While the tests are being carried out, the grout must be kept in motion."

2.3 Section 3.4.2.3:

Instead of "(see 3.4)", write "(see 3.3.3)".

2.4 Section 3.4.3:

The word "vessel method" is to be replaced by "container method". Accordingly, use of the word "vessels" in the subsections is always taken to mean "containers". All occurrences in the subsections of the words "calliper gauge" must be replaced by the words "depth indicator".

2.5 Section 3.4.3.2:

Under a), the first two sentences in the first paragraph must carry the following wording: "The initial measurement must be performed immediately after the containers have been filled with grout, while the gap between the surface of the grout and the upper edge of the container with the cover plate on the container must be read off at at least 6 points using the depth indicator or other measuring devices. The marking on the cover plate must correspond to the marking on the edge of the container (reference point)."

Draft

Under a), the second paragraph must be reworded as follows: “In the case of the second measurement, the gap between the firm surface of the grout and the upper edge of the vessel must be measured at the same 6 points used for the initial measurement while using the same measuring method.”

Under a), “(see 3.6)” at the end is to be deleted.

2.6 Section 3.5.1.2:

“b)...” must be reworded as follows: “b) Storage facilities pursuant to Section 4.1 of DIN EN 196-1”.

2.7 Re Section 3.5.1.3.1:

The third paragraph must be supplemented as follows at the end: “The samples must then be covered with a glass top.”

3 Re DIN EN 446: 1996-07

3.1 Re Section 0:

The words “Requirements pertaining to the grout” shall be replaced with “Requirements in terms of press compacting using grout” and “Eurocode 2” shall be replaced by “DIN ENV 1992-1-1”.

3.2 Re Section 3:

The definitions of the grouting procedures given in subsections 3.2 and 3.3 must be reworded as follows:

“3.2 Re-pressing: Additional press compacting designed to remove air bubbles or water blisters by grouting in the pre-stressing cuts before the original grout has hardened.

3.3 Re-backfilling: Additional press compacting designed to remove air bubbles or water blisters by grouting in the pre-stressing cuts after the original grout has hardened.”

3.3 Re Section 4:

The following must be clarified regarding Section 4: “The preliminary test as per DIN EN 446:1996-07, Section 4, shall be regarded as having been satisfied from the point of view of the building inspection in relation to the materials pursuant to DIN EN 447:1996-07, Section 4, provided the latter comply with the technical rules specified in Section C 2 or, in the event of significant deviations, the required proof of usability is available and the proof of conformity was furnished in relation to it.”

3.4 Re Section 7.3:

The words “Press compacting and re-pressing procedures” must replace the words “Pressing and re-pressing procedures”.

3.5 Re Section 7.6:

The following shall be deleted: "without curing retardant".

3.6 Re Section 7.8:

The word “re-pressing” must replace all instances of the words “re-injection” and “re-press compacting” in the heading as well as in the body of text itself.

3.7 Re Section 7.9:

In the heading and the body of text itself, the word “re-pressing” must be replaced by the word "re-backfilling” and, in the first sentence of the text, the word “form" must be replaced by the words “have formed”.

3.8 Re Section 8.1:

After the first bullet point, the word “consumer” must be replaced by “client”, while the second sentence after the second bullet point must be reworded as follows: “The competent centre may call for additional checks.”

Draft

3.9 Re Section 8.4:

After "bleeding:" the following shall be added: "...grout fluidity ... the requirements".

The word “grouting” must be replaced by the words “press compacting instruction”.

4 Re DIN EN 447: 1996-07

4.1 Re Section 0:

In the second paragraph, the words “above all” before the bullet points must be deleted.

4.2 Table 1:

Table 1 must be reworded as follows:

Test method as per DIN EN 445	Immediately after mixing, time (in s)	30 minutes after mixing[1)] or following press compacting, time (in s)	at the outlet of the cladding tube, time (in s)
Immersion test	≤ 30	≥ 80 (200)[2)]	≤ 30
Funnel method	≥ 25 (50)[2)]	≥ 25 (50)[2)]	≤ 10

1 The mixing time shall be measured from the point when all the necessary material quantities are to be found in the mixer.
2 As regards grouts which are prepared in certain mixers which have a high agitator speed, the limit values indicated in Table 1 above may be increased by up to 200 s in the case of the immersion test and by up to 50 s in the case of the funnel method. The choice of mixer and these limit values must be agreed with the competent authority.

4.3 Re Section 4.2:

The words “blast furnace slag” must be replaced by “granulated blast furnace slag” in footnote 2.

4.4 Re Section 4.4:

By way of deviation from Section 4.4, only those admixtures (grouting aids) which are approved for use in grout may be used.

4.5 Re Section 5.2:

In the second sentence, the words “Sections 3.2 and 3.3” shall be replaced by “Section 3.2”.

In deviation from Section 5.2, fluidity testing may only be performed in relation to grouts containing grouting aids using the immersion test as per Section 3.2.1 of DIN EN 445 since the limit values under Table 1 relating to the discharge hopper do not apply to this grout. If, during the suitability testing of a grout containing grouting aids, the limit values relating to the discharge hopper are calibrated using the immersion test, measurements may also be conducted in accordance with Section 3.2.2 of DIN EN 445 using the funnel method. The limit values determined must be observed instead of the values specified in Table 1 in relation to the funnel method.

4.6 Re Section 5.3:

Reference shall be made to “Section 3.3” instead of to “Section 3.4”.

4.7 Re Section 5.4:

Reference shall be made to “Section 3.4” instead of to “Section 3.5 or 3.6”. The final sentence must be supplemented as follows: “Grout containing foaming agents may not exhibit any reduction in volume during the suitability test.”

4.8 Re Section 5.5:

In deviation from Section 5.5, the compressive strength of grouts containing grouting aids may only be tested using the cylinders indicated in Table 2.

4.9 Table 2:

In Table 2, the references must be altered as follows:

To “Section 3.5.1” instead of to “Section 3.7”,

Draft

to “Section 3.5.2” instead of to “Section 3.8” and
in footnote 1), to “Section 3.5.2” instead of to “Section 3.6”.

4.10 Re Section 6:

By way of deviation from Section 6, the mixing time is limited to 4 minutes.

Appendix C 2.1.5

Table: Use of cement according to EN 197-1:2011[17]

The DIN 1164-1:1994-10 standard was replaced by the European standard EN 197-1:2011 [17] as well as by the Standard DIN 1164-10:2013-03. Insofar as there is a reference to DIN 1164 (earlier editions) in the technical rules of the administrative provision in the Building Regulations, the cements in line with EN 197-1:2011[17] can be used according to the following table. The restrictions on use in the technical rules remain unaffected.

Item number	Technical rule		Usable cement (cement type) according to EN 197-1:2011[17]
1	2	3	4
1	DIN EN 447	1996-07	CEM I
2	DIN EN 588-1	1996-11	In line with the application rules for exposure class XF 1 in DIN 1045-2:2008-08
3	DIN 4166	1997-10	All
4	DIN 18069	1985-11	Depending on area of application, in line with the application rules for exposure classes XF in DIN 1045-2:2008-08
5	DIN 18148	2000-10	All
6	DIN 18162	2000-10	
7	DIN EN 12763	2000-10	As for Item no.2

[17] Implemented in Germany in DIN EN 197-1:2011-11

Table A: Classification of concrete properties under DIN 1045:1988-07 on concrete as per DIN EN 206-1[18]

Item number	Section DIN 1045:1988-07		DIN EN 206-1 or DIN 1045-2 exposure class or section
1	2	3	4
1	6.5.5.1	Unreinforced concrete	X0
2	6.5.1, 6.5.5.1	Internal component	XC1
3	6.5.1, 6.5.5.1	External component	XC4/XF1
4	6.5.7.2	Waterproof concrete	DIN 1045-2, 5.5.3
5	6.5.7.3	Concrete with high frost-resistance	XC4/XF1
6	6.5.7.4	Concrete with high frost and de-icing salt resistance	XF4
7	6.5.7.4	Concrete with high frost and de-icing resistance, very high frost and de-icing impact	XF4
8	6.5.7.5	Concrete with high resistance to low chemical attack	XA1
9	6.5.7.5	Concrete with high resistance to high chemical attack	XA2
10	6.5.7.5	Concrete with high resistance to very high chemical attack	XA2
11	6.5.7.6	Concrete with high wear resistance	XM1
12	6.5.7.7	Concrete for use at high operating temperatures up to 250°C	DIN 1045-2, 5.3.6
13	6.5.7.8	Concrete for underwater filling (underwater concrete)	DIN 1045-2, 5.3.4

[18] Hartz, U.: Neues Normenwerk im Betonbau [new set of standards in concrete construction], published in DIBt Mitteilungen no. 1/2001, p. 2

Annexes C 2

Appendix C 2.1.6

Concrete admixtures may only be added to concrete if proof of their usability can be furnished pursuant to DIN EN 934-2: 2012-08 or in the form of a European technical approval/assessment.

Appendix C 2.1.7

In the production of pre-cast elements made from concrete, reinforced concrete and pre-stressed concrete or steel fibre reinforced concrete the technical rules of the Building Regulations, item no. C 2.1.4.3 apply to the concrete.

Appendix C 2.2.1

Procedure for determining an alternative rated thermal conductivity valueλ for masonry in the certificate of conformity

– July 2003 Version –

1 Procedure

The procedures under DIN V 4108-4:2004-07, Annex A apply when determining rated thermal conductivity valuesλ for a specific type of masonry, unless otherwise specified below.

In addition to DIN V 4108-4:2004-07, Section A.3.3, the measurement procedure under the hot strip method pursuant to the "DIBt Guideline on measuring thermal conductivity $\lambda_{10,tr}$ of masonry specimens", October 2002 version[19], must be performed on specimens less than 15 mm thick.

Article 2 Test Report

The information in the certificate of conformity shall be listed in the test report

- Procedure to determine the ratedλ thermal conductivity value for masonry
- Stone type as per DIN, overhead type
- Format(s), information on hole pattern and sequence (diagram)
- Bulk density class, bulk density of stone material, strength class
- Mortar type(s)
- Conversion factor F_m
- Adsorption moisture content $u_{m,80}$
- Thermal conductivity of stone materials (λ or $\lambda_{z,extr.}$ or $\lambda_{u,extr.}$) for determination as per DIN V 4108-4:2004-07, Sections A.3 and A.4
- equivalent thermal conductivity of masonry
- Ratedλ thermal conductivity value for masonry

3 Monitoring and conformity mark specifications

Where an alternative ratedλ thermal conductivity value is determined under DIN V 4108-4:2004-07, Sections A.2 or A.3 or A.4 for masonry units of specific bulk density classes, the alternative rated value according to the masonry standard "λ = ... W/(m • K)" must also be marked on the conformity mark as a key feature.

The ratedλ thermal conductivity value determined for masonry applies as long as the following measurements are checked at least once a year:

- Thermal conductivity $\lambda_{10,tr}$ as per DIN V 4108-4:2004-07, Section A.2.6, for wall specimens or DIN V 4108-4:2004-07, Section A.3.5, for stone materials
- Adsorption moisture content as per DIN EN ISO 12571:2000-04 where the conversion factor F_m deviates from DIN V 4108-4:2004-07 (from DIN EN ISO 10456:2000-08 for example).

[19] Published in DIBt Mitteilungen no. 2/2003

Draft

Annexes C 2

Appendix C 2.3.1

Where construction products are delivered to users via retail and the delivered construction products are divided by the retailer, the parts must be distinctively marked by means of a package insert, paint application, lanyard tags, etc. All divisions must be documented.

Appendix C 2.3.2

Where Standard DIN 1052 provides for several kinds of metal, the alloy, material number, steel grade or steel tendons for metallic fasteners must be indicated as a key feature for use in the conformity mark.

Appendix C 2.3.3

Adhesives for load-bearing wooden components must meet the requirements of adhesive type I under DIN EN 301:2013-12 for use in Germany of wooden components glued together. For these adhesives, the performance characteristics under DIN EN 301:2013-12, Section 6 must be determined and documented, and open drying time under DIN 68141:2008-01, Section 3.2.2 identified.

In the Ü sign, possible application extensions must also be indicated (e.g. hardwood bonding or bonding of chemically treated wood).

Appendix C 2.4.1

The technical rules only apply to steel grades with the following material numbers:

S 235	1.0037, 1.0036, 1.0038, 1.0114, 1.0116, 1.0117, 1.0120, 1.0121, 1.0122, 1.0115, 1.0118, 1.0119
S 275	1.0044, 1.0143, 1.0144, 1.0145, 1.0128, 1.0140, 1.0141, 1.0142
S 355	1.0045, 1.0553, 1.0570, 1.0577, 1.0595, 1.0596, 1.0551, 1.0554, 1.0569, 1.0579, 1.0593, 1.0594

Appendix C 2.4.2

The material number or abbreviation must be indicated as a key feature in the conformity mark.

Where a test certificate as per DIN EN 10204:2005-01 is required in the Technical Building Regulations, this test certificate must be attached as an enclosure with the delivery note and furnished with the conformity mark. They are sufficient as information on key features under the Ü-Zeichen-Verordnung [Regulation on conformity marks].

Where metallic construction products are delivered to users via retail and the delivered construction products are divided by the retailer, the parts must be distinctively marked by means of restamping, paint application, adhesive labels or lanyard tags. All divisions must be documented. This applies accordingly to metallic construction products that will be reused.

Appendix C 2.4.3

In the case of scheduled deviations from the nominal metal profile dimensions, the profile standard must, as a technical rule, be indicated in the conformity mark with "Special Profile". The deviation limits and form tolerances indicated in the profile standards remain unaffected. Compliance with the deviation limits and form tolerances must be incorporated in the in-house production control.

Appendix C 2.4.4

The technical rules only apply to steel grades with the following material numbers: 1.0254, 1.0256, 1.0421.

Draft

Annexes C 2

Appendix C 2.4.5

The technical rules apply to steel grades under DIN EN ISO 10250-2:1999-12 with the following material numbers: 1.0038, 1.0116, 1.0570 and DIN EN 10222-4:2001-12 with the material numbers 1.0565 and 1.0571.

Appendix C 2.4.6

The technical rules only apply to steel grades with the following material numbers: 1.4301, 1.4435, 1.4539, 1.4541 and 1.4571.

Appendix C 2.4.7

The technical rules only apply to steel grades with the material number 1.4561.

Appendix C 2.4.8

If intermediate products (strip, sheet) with the ÜZ certificate of conformity are used, the ÜHP certificate of conformity is sufficient for the construction product. In this case, reference must be made to the intermediate product conformity mark in the conformity mark for the construction product.

Appendix C 2.4.9

The technical rules only apply to steel grades with the material number: 1.4878.

Appendix C 2.4.10

Scope and type of independent quality control testing for rivets

Time	**Type of testing**	**Scope of testing**
Initial testing	In-depth testing	customary and special properties
Independent quality control in year 1	normal testing	customary properties
Independent quality control from year 2	reduced testing	customary properties

During independent quality control, samples shall be taken at six-month intervals so that all product types are tested alternately.

Customary properties

Characteristic	tested product	Nature of testing scope		
		reduced	normal	in-depth
		L P Pr	L P Pr	L P Pr
Dimensions	all	1 x 3 x 1	2 x 3 x 1	4 x 3 x 1
Shear test	all	1 x 3 x 1	2 x 3 x 1	4 x 3 x 1
Hardness test	all	1 x 3 x 3	2 x 3 x 3	4 x 3 x 1
Head impact strength	all	1 x 3 x 1	2 x 3 x 1	4 x 3 x 1

Special properties

Characteristic	Nature of in-depth testing scope		
	L	P	Pr
Layer thickness	1 x	3 x	3
Tensile test	1 x	3 x	1

Draft

Annexes C 2

Notch impact energy	1 x	3 x	1

L = Lot
P = Sample
Pr = Test

Appendix C 2.4.11

Scope and type of independent quality control testing for screws and nuts

Time	**Type of testing**	**Scope of testing**
Initial testing	In-depth testing	customary and special properties
Independent quality control in year 1	normal testing	customary properties
Independent quality control from year 2	reduced testing	customary properties

During independent quality control, samples shall be taken at six-month intervals so that all product types are tested alternately.

Customary properties

Characteristic	**tested product**	**Nature of testing scope**		
		reduced	normal	in-depth
		L P Pr	L P Pr	L P Pr
Dimensions	all products	1 x 3 x 1	2 x 3 x 1	4 x 3 x 1
Oblique tensile test or Tensile test on entire screw	8.8 and 10.9 screws	1 x 3 x 1	2 x 3 x 1	4 x 3 x 1
Tensile test on samples with worn thread	4.6 and 5.6 screws	1 x 3 x 1	2 x 3 x 1	4 x 3 x 1
Test force test	all nuts	1 x 3 x 1	2 x 3 x 1	4 x 3 x 1
Pull test	8.8 and 10.9 sets	1 x 6 x 1	2 x 12 x 1	4 x 12 x 1
Hardness HV 30	all products	1 x 1 x 3	2 x 2 x 3	4 x 2 x 3
Hardness HV 0.3	8.8 and 10.9 screws	1 x 1 x 3	2 x 2 x 3	4 x 2 x 3
Ground surface (limit state)	10.9 screws	1 x 1 x 3	2 x 2 x 3	4 x 2 x 3
Layer thickness	all products	1 x 1 x 3	2 x 2 x 3	4 x 2 x 3

Special properties

Characteristic	tested product	Nature of in-depth testing scope		
		L	P	Pr
Chemical composition	Screws and nuts	2 x	2 x	1
Start test	8.8 and 10.9 screws	4 x	3 x	1
Notch impact energy	Screws	4 x	3 x	1
Crack indication	Screws and nuts	1*) x +4 x	100 x 20 x	1 1

L = Lot
P = Sample
Pr = Test

* Scope of testing on disputed lots or when defects occur

Draft

Annexes C 2

Appendix C 2.4.12

Steel components and cast iron components must match the related item numbers in Section C 2.

Appendix C 2.4.13

Steel components and cast iron components must match the related item numbers in Section C 2.

Zinc bath class 1 under Table 8 as per DASt Guideline 022 is only permissible for hot galvanising of supporting steel and cast iron components. The simplified proof under Section 4.2.2 of DASt Guideline 022 must be furnished. Mathematical proof as per Appendix 4 may not be used.

DASt Guideline 022 applies accordingly to cast steel components.

Appendix C 2.6.1

When using landing doors as per

DIN 18090:1997-01
DIN 18091:1993-07
DIN 18092:1992-04

1. the doors must be installed in solid masonry or concrete walls;

2. the lift cage must be predominantly made of non-combustible building materials (building material class A under DIN 4102-1:1998-05); this is the case if

- the load-bearing and stiffening parts of the lift cage are made of non-combustible building materials

and

- the other parts of the lift cage (such as wall and ceiling cladding, flooring, ventilation and lighting covers) do not have more than 2.5 kg of combustible fuels, (at least building material class B 2) per m^2 of the inner lift cage area);

3. the doors must be controlled so that they only stay open as long as is necessary to enter or leave the lift cage;

4. where several doors are positioned side by side, the doors must be separated by fire-resistant components and are attached to these components.

Appendix C 2.6.2

Door closers as per DIN 18263-1:2015-04 may only be used as replacement parts. They are only suitable for fire and/or smoke barriers if these are single-leaf sliding doors.

Appendix C 2.6.3

1 General

The following provisions shall apply to interior doors, on which there are requirements on sound insulation. Interior doors consist of the door leaf and frame.

Interior doors must be of at least normally flame-resistant materials.

2 Rated sound insulation value

Where sound insulation properties must be shown according to purpose, the rated sound insulation value R_w must be determined as per DIN EN ISO 10140-1:2012-05, DIN EN ISO 10140-2, -4 and -5:2010-12 and DIN EN ISO 717-1:2013-06.

Draft

Annexes C 2

Test reports in accordance with DIN EN 20140-3:1995-05 and DIN EN ISO 140-3:2005-03 in conjunction with DIN EN ISO 717-1:1997-01, or DIN EN ISO 717-1:2006-11 or DIN EN ISO 717-1:2013-06, that are created before the entry into force of this edition of the administrative provision in the Building Regulations may continue to be used.

3 Main features for the U mark

In the conformity mark of an interior door meeting the requirements of Section 2, the rated sound insulation value $_{R}$w,R shall be submitted in addition to the combinations of door leaves with frames to which this applies.

Appendix C 2.6.4

Proof of usability as per § 17(1) MBO is required.

Appendix C 2.7.1

DIN EN 1337-8:2008-01 to guide bearings and retentive constructions. For tribological paring steel / steel used in guide bearings and retentive constructions, the corresponding section of DIN V 4141-13:2010-07 can be used.

Appendix C 2.8.1

Plastic gratings which can be walked on as per DIN 24537-3: 2007-08 require a general building inspectorate approval as proof of usability if the drop height exceeds 0.5 m or if the span of the grates exceeds 0.5 m.

Appendix C 2.9.1

Re DIN 18148:2000-10

Re Section 1: Lightweight cavity wall panels may only be used to manufacture lightweight dividing walls pursuant to DIN 4103-1:2015-06.

Appendix C 2.9.2

Re DIN 18162:2000-10

Re Section 1: Unreinforced lightweight concrete wall panels may only be used to manufacture lightweight dividing walls pursuant to DIN 4103-1:2015-06.

Appendix C 2.9.3

The fire performance of non-flammable and flame-retardant wet-processed factory-produced mineral panels shall be proven in line with item number C 3.9, or C 3.11.

As regards products which are in class TVOC 3 according to Table 3 and/or FH class 3 according to Table 4 and therefore cannot be used indoors, the Ü-marking shall contain the following: "The product cannot be used indoors"

Appendix C 2.10.1

Re DIN 7865-1 and DIN 7865-2

DIN 7865-2 applies with the exception of Section 8.1(2) and (4), Section 8.3 and Annex A.

The building material class must be indicated in the product identification.

Appendix C 2.12.1

Pipes and fittings may only be glued if

(1) the adhesive meets the requirements of DIN EN 14680:2006-10 or a European technical assessment, has the CE mark and the adhesive manufacturer refers to this plastic pipe standard or

Draft

(2) the adhesive, insofar as it deviates significantly from the above-mentioned harmonised technical specifications, has general building inspectorate approval for this purpose.

Appendix C 2.12.2

The use of waste pipes and fittings with a nominal ring stiffness lower than SN 4 (tested pursuant to DIN EN ISO 9969) requires general building inspectorate approval.

Appendix C 2.12.3

Re DIN 588-1: 1996-11

Re Section 4.1 General material composition

The technical rule only applies to products listed under type NT (asbestos-free technology).

Appendix C 2.12.4

For multi-layer waste pipes and fittings with mineral filler content, proof of usability is required by means of general building inspectorate approvals.

Appendix C 2.12.5

Only natural mineral supplements and fillers pursuant to DIN EN 12620:2008-07 may be added. The use of other natural mineral supplements and fillers requires general building inspectorate approval.

Appendix C 2.12.6

General building inspectorate approval is required for the final determination of the usability of construction products produced on-site from semi-finished products for the renovation of underground drainage networks.

Appendix C 2.13.1

In place of the values named in DIN V 4701-10:2003-08, Annex C, Section C.1.4.2, Table C.1-4d and Section C.3.4.2, Table C.3-4c, product-related characteristic values applying within the scope of the detailed calculation procedure shall be used and provided in the conformity mark.

The following must also be observed:

1 Under the conditions laid down in DIN V 4701-10:2003-08, the values laid down in the tables named above for the heat production expenses shall be reduced.

2 The manufacturer must verify the cheaper product-related parameters within the scope of an initial assessment by an approved building inspection body. The basis for the verification is the determination of the performance coefficient under the conditions of DIN V 4701-10:2003-08 in respect of source and heating circuit temperature in line with the statements under the DIN EN 14511 series of standards and the area of use specified by the manufacturer.

3 The performance coefficient including the measurement of the underlying temperature difference on the condenser shall be numerically provided in the conformity marks in such a way that the calculation of the heat production expenses specific to the product and use by third parties is possible through the application of DIN V 4701-10:2003-08.

4 In addition, the testing standards underlying the determination of the product-related parameters shall be provided in the conformity marks.

Appendix C 2.13.2

1 In place of the values named in DIN V 4701-10:2003-08, Table 5.1-10 or Appendix C, Section C.1.4.1, Table C.1-4a and Section C.3.4.1, Table C.3-4a, product-related characteristic values applying within the scope of the detailed calculation procedure shall be used and given conformity mark.

Annexes C 2

1.1 Under the conditions laid down in DIN V 4701-10:2003-08, the values laid down in the tables named above for the heat production coverage by solar energy shall be exceeded.

1.2 The manufacturer must verify the cheaper product-related parameters within the scope of an initial assessment by an approved building inspection body. The basis for the verification for the collector of the determination is either

- the conversion factor η_0
- the heat transmission coefficient k_1
- the heat transmission coefficient k_2
- the correction factor for the angle of sunlight IAM (50º)
- the effective heat capacity C and
- the collection factor (aperture) A_c

under the conditions of DIN V 4701-10:2003-08 in accordance with DIN EN 12975 or

- the reference annual energy output of the solar collector under DIN EN 12976-2 for the Würzburg location and
- the collection factor (aperture) A_c

and for the solar cylinder

- the volume of the solar section of the cylinder
- the volume of the standby section of the cylinder
- the standby heat loss of the cylinder

under the conditions of DIN V 4701-10:2003-08 in accordance with DIN EN 12977-3.

The values named above shall be numerically provided in the conformity mark in such a way that the calculation of the coverage specific to the product and use by third parties is possible through the application of DIN V 4701-10:2003-08.

In addition, the testing standards underlying the determination of the product-related parameters shall be provided in the conformity mark.

Appendix C 2.13.3

In place of the values named in DIN V 4701-10:2003-08, Table 5.1-10 or Appendix C, Section C.1.4.1, Table C.1-4a and Section C.3.4.1, Table C.3-4a, product-related characteristic values applying within the scope of the detailed calculation procedure shall be used and given conformity marks.

The following must also be observed:

1 Under the conditions laid down in DIN V 4701-10:2003-08, the values laid down in the tables named above for the heat production coverage by solar energy shall be exceeded.

2 The manufacturer must verify the cheaper product-related parameters within the scope of an initial assessment by an approved building inspection body. The basis for the verification is the determination of

- the conversion factor η_0
- the heat transmission coefficient k_1
- the heat transmission coefficient k_2
- the correction factor for the angle of sunlight IAM (50º)
- the effective heat capacity C and
- the collection factor (aperture) A_c

under the conditions of DIN V 4701-10:2003-08 in accordance with DIN EN ISO 9806.

The values named above shall be numerically provided in the conformity mark in such a way that the calculation of the coverage specific to the product and use by third parties is possible through the application of DIN V 4701-10:2003-08.

In addition, the testing standards underlying the determination of the product-related parameters shall be provided in the conformity mark.

Appendix C 2.13.4

Draft

Annexes C 2

1 In place of the values named in DIN V 4701-10:2003-08, Table 5.1-10 or Appendix C, Section C.1.4.1, Table C.1-4a and/or Section C.3.4.1, Table C.3-4a, product-related characteristic values applying within the scope of the detailed calculation procedure shall be used and given conformity mark.

1.1 Under the conditions laid down in DIN V 4701-10:2003-08, the values laid down in the tables named above for the heat production coverage by solar energy shall be exceeded.

1.2 The manufacturer must verify the cheaper product-related parameters within the scope of an initial assessment by an approved building inspection body. The basis for the verification is the determination of the

- volume of the solar section of the cylinder
- volume of the standby section of the cylinder
- standby heat loss of the cylinder

under the conditions of DIN V 4701-10:2003-08 in accordance with DIN EN 12977-3.

1.3 The volume of the solar section of the cylinder, the volume of the standby section of the cylinder and the standby heat loss of the cylinder shall be numerically provided in the conformity mark in such a way that the calculation of the coverage specific to the product and use by third parties is possible through the application of DIN V 4701-10:2003-08.

1.4 In addition, the testing standards underlying the determination of the product-related parameters shall be provided in the conformity mark.

Appendix C 2.13.5

1 In place of the values named in DIN V 4701-10:2003-08, Appendix C, Section C.1.3, Table C 1-3a, Section C.1.4.2, Table C.1-4c and Section C.3.3, Table C.3-3, product-related characteristic values applying within the scope of the detailed calculation procedure shall be used and provided in conformity mark.

1.1 Under the conditions laid down in DIN V 4701-10:2003-08, the values laid down in the tables named above for the heat production expenses or the surface heat loss shall be reduced.

1.2 The manufacturer must verify the cheaper product-related parameters within the scope of an initial assessment by an approved building inspection body. The basis of the verification is the determination of the standby heat loss of the cylinder, where applicable based on the number of connectors under the conditions of DIN V 4701-10:2003-08 in accordance with DIN V 4753-7 and DIN EN 12897 or DIN EN 89 or DIN 60379.

1.3 In the conformity mark, the standby heat loss of the cylinder shall be numerically provided in such a way that the calculation of the heat production expenses is possible through the application of DIN V 4701-10:2003-08 by third parties.

1.4 In addition, the testing standards underlying the determination of the product-related parameters shall be provided in the conformity mark.

Appendix C 2.14.1

Labelling with a DIN testing and monitoring mark with registration number is not required to meet the requirements of the technical rules set out under column 3 or for labelling with a conformity mark under state building regulations.

Appendix C 2.14.2

In place of the values named in DIN V 4701-10:2003-08, Annex C, Section C.1.4.2, Table C.1-4b and Section C.3.4.2, Table C.3-4b, product-related characteristic values applying within the scope of the detailed calculation procedure shall be used and provided in conformity mark.

The following must also be observed:

1 Under the conditions laid down in DIN V 4701-10:2003-08, the values laid down in the tables named above for the heat production expenses shall be reduced.

2 The manufacturer must verify the cheaper product-related parameters within the scope of an initial assessment by an approved building inspection body. The basis for the verification is the determination of the

- Nominal heat output efficiency,

- Efficiency (degree of utilisation) at 30 % partial load and
- Heat loss during operational readiness,

measured under the conditions of DIN V 4701-10:2003-08 in accordance with

- DIN EN 297 including DIN EN 297/A2,
- DIN EN 303-3 including DIN EN 303-3/prA2,
- DIN EN 15502-2-1,
- DIN EN 15502-2-2,
- DIN EN 656 or
- DIN EN 677 for gas-fired heat generators or
- DIN EN 304 for oil-fired heat generators.

Where these or equivalent tests have already been carried out for CE marking verification under Council Directive 92/42/EEC of 21 May 1992 on efficiency requirements for new hot-water boilers fired with liquid or gaseous fuels, the results of these shall be taken over by the approved building inspection body.

3 Nominal heat output efficiency, efficiency (degree of utilisation) at 30 % partial load and heat loss during operational readiness shall be numerically provided in the conformity mark in such a way that the calculation of the heat production expenses specific to the product and use by third parties is possible through the application of DIN V 4701-10:2003-08.

In addition, the testing standards underlying the determination of the product-related parameters shall be provided in the conformity mark.

Appendix C 2.14.3

In place of the values named in DIN V 4701-10:2003-08, Annex C, Section C.1.4.2, Table C.1-4b and Section C.3.4.2, Table C.3-4b, product-related characteristic values applying within the scope of the detailed calculation procedure shall be used and provided in conformity mark.

The following must also be observed:

1 Under the conditions laid down in DIN V 4701-10:2003-08, the values laid down in the tables named above for the heat production expenses shall be reduced.

2 The manufacturer must verify the cheaper product-related parameters within the scope of an initial assessment by an approved building inspection body. The basis for the verification is the determination of the

- Nominal heat output efficiency,
- Efficiency (degree of utilisation) at 30 % partial load and
- Heat loss during operational readiness,

measured under the conditions of DIN V 4701-10:2003-08 in accordance with

- DIN EN 297 including DIN EN 297/A2,
- DIN EN 303-3 including DIN EN 303-3/prA2,
- DIN EN 15502-2-1,
- DIN EN 15502-2-2,
- DIN EN 656 or
- DIN EN 677 for gas-fired heat generators or
- DIN EN 304 for oil-fired heat generators.

Where these or equivalent tests have already been carried out, the results shall be taken over by the approved building inspection body.

3 Nominal heat output efficiency, efficiency (degree of utilisation) at 30 % partial load and heat loss during operational readiness shall be numerically provided in the conformity mark in such a way that the calculation of the heat production expenses specific to the product and use by third parties is possible through the application of DIN V 4701-10:2003-08.

In addition, the testing standards underlying the determination of the product-related parameters shall be provided in the conformity mark.

Draft

Appendix C 2.14.4

Compliance of sealants must be confirmed for the manufacturing plant with a certificate of conformity based on in-house production control pursuant to DIN EN 14241-1:2013-11 Section 8.4 and regular external monitoring including initial testing of the construction product must be carried out in accordance with the following provisions.

For the issuing of a certificate of conformity and external monitoring including product tests, the manufacturer of the construction product must call on a recognised certification body and recognised monitoring body. In-house production control must be carried out regularly via external monitoring in the factory, at least twice a year. For external monitoring, initial testing of the construction product must be carried out in line with Section 6 of the standard. Moreover, samples for sample testing must be taken and the material properties tested on at least five samples in line with Section 8.3 Table 8 of the standard.

Sampling and testing is always the responsibility of the approved monitoring body. The results of certification and external monitoring should be kept for at least five years.

Appendix C 2.15.1

Impacts from flooding are not considered in the standard.

Appendix C 2.15.2

Impacts from an earthquake are not considered in the standard.

For unchambered containers that are fully embedded into the soil, the effects of an earthquake are not relevant to stability and are therefore not covered by the standard if appropriate constructive measures are taken to prevent the effects of union joints being transferred to the container. After an earthquake event classed higher than that assumed for earthquake zones 1 DIN 4149, a function test must be carried out on the container.

Containers embedded in the soil for which one or both of the floors leads to building areas for accessibility purposes or earth-covered containers (barrow-types storage) where the container is completely or partly above the ground surface) do not qualify as fully embedded in the soil. Effects due to earthquakes must be demonstrated.

Appendix C 2.15.3

Evidence of the resistance of the steel materials to be used to manufacture the construction product to water-polluting liquid must be provided pursuant to DIN 6601:2007-04/ Corrigendum 1:2007-08.

The manufacturer must demonstrably control the required procedures to ensure the construction product is properly manufactured. Evidence shall be provided by means of a welding certificate for execution class EXC 2 or higher, as per DIN EN 1090-2 for steel construction products and as per DIN EN 1090-3 for aluminium construction products. In derogation of DIN EN 1090-2, Table 14 or DIN EN 1090-3, Table 7 the welding supervision staff responsible for coordinating the construction product manufacturing processes must have at least the special technical skills under DIN EN ISO 14731.

Full traceability must be ensured for the construction materials used to manufacture the construction product.

Appendix C 2.15.4

- The containers are suitable for installation in buildings.
- Impacts from earthquakes and flooding are not considered in the standard.
- Dome supports shall be made with an inside diameter of at least 600 mm.
- For dimensions other than those specified in DIN 6616, stability can be verified in accordance with the following AD 2000 data sheets in conjunction with AD 2000 data sheets B 0:2007-05 and S 3/0:2007-11:

B 1:2000-10	(Cylinder and spherical shells with interior overpressure)
B 3:2000-10	(Convex ends with interior and exterior overpressure)
B 6:2006-10	(Cylinder shells with exterior overpressure)
B 8:2007-05	(Flanges)
B 9:2007-11	(Sections in cylinders, cones, shells, spheres)
S 3/2:2001-09	(Verification for horizontal containers on saddles)

Draft

- Container walls may only be designed in accordance with AD 2000 data sheets for overpressure affecting the fluid column by up to a maximum of +0.5 bars due to permissible operational overpressure and affecting the container walls in the inspection space of double-walled containers by +0.6 bars due to test overpressure.

- However, in derogation of DIN 6616, Section 7, containers designed in accordance with AD 2000 data must be tested in accordance with AD-2000 data sheet HP30:2003-01 with 1.3 times the maximum permissible stored fluid pressure on the internal wall. The inspection room should generally be tested with a test pressure of +0.6 bars.

Appendix C 2.15.5

Impacts from an earthquake are not considered in the standard.

Appendix C 2.15.6

In derogation of Section 5.4.2, sentence 1 of DIN 6625-1, evidence of manufacturer's qualification shall be provided by means of a welding certificate for execution class EXC 2 as per DIN EN 1090-2 or higher. The welding supervision staff responsible for coordinating the construction product manufacturing processes must have at least the special technical skills under DIN EN ISO 14731 for the welding work to be carried out.
Full traceability must be ensured for the construction materials used to manufacture the construction product.

Appendix C 2.15.7

TRbF 20, Annex J No. 5(3) does not apply.

When storing liquids with flashpoint > 55 °C

- TRbF 20, Annex J No. 3(7) does not apply,
- the references to areas prone to explosion in Annex K TRbF 20 No. 3 do not apply.

Appendix C 2.15.8

TRbF 20, Annex J No. 5(3) does not apply.

Permissible storage liquids are taken from DIN 6601:1991-10.

Monitoring must take place in accordance with DIN 6600:1989-09.

Appendix C 2.15.9

Evidence of compliance with this technical rule does not apply if pipes or hoses and related fittings, sealants and mountings meet the requirements of the Pressure Equipment Directive (PED) and have a CE mark.

Appendix C 2.15.10

Re TRbF 50 (2002-06), Annex A

No. 3.21 (5) of Annex A does not apply.

Appendix C 2.15.11

Only ceramic tiles with general building inspectorate approved waterproof layers come under the scope of application of the technical rule.

For ceramic tiles in plants used for storing, filling and handling flammable, easily flammable and extremely flammable water-polluting substances, the requirements of AGI Data sheet S 30 "Electrically dissipative floorings" (2000-04) must also be observed.

Draft

Annexes C 2

Appendix C 2.15.12

1 The DafStb guideline "Concrete construction when handling water-polluting materials (BUmwS)" does not regulate how building components have to be transported, stored in the interim or installed so that they are then suitable for use as part of the sealing surface.

2 The provisions of the following technical regulations pertaining to water-polluting materials (TRwS)

- DWA-A 786 "Execution of sealing surfaces" and
- DWA-A 781 to 784 relating to petrol stations for the fuelling of motor vehicles, track vehicles, watercraft and aircraft

must be taken into consideration.

3 The DafStb guideline "Concrete construction when handling water-polluting materials (BUmwS)" does not apply to use in installations that are used for storing and drawing off sewage, liquid manure and water that has seeped through silage.

Appendix C 2.15.13

For waterstops encased in concrete, the provisions of the DafStb Guideline "Concrete construction when handling water-polluting materials ", Annex B also apply: Explanatory notes re Section 7.3.3.

Appendix C 2.15.14

The Bunsen burner test is required for hoses (contrary to the information in Section 4.5 of DIN EN 12514-1). Components subject to compression pressure must comply with nominal pressure stage PN10. Regulation of the anti-siphon valve is excluded.

Appendix C 2.15.15

Where the listed pipes are classified as single-walled metal pipes, related fittings and mountings for pipes for the storage of water-polluting liquids under item no. C 2.15.13, the technical rule listed therein applies with the ÜH certificate of conformity.

Appendix C 2.15.16

Only lining and grouting mastics and mortars for ceramic tiles with general building inspectorate approved waterproof layers come under the scope of application of the technical rule. For ceramic tiles in plants used for storing, filling and handling flammable, easily flammable and extremely flammable water-polluting substances, the requirements of AGI Data sheet S 30 "Electrically dissipative floorings" (2000-04) must also be observed.

Appendix C 2.15.17

1 Construction product requirements

Leak detectors must be designed in accordance with DIN EN 13160-2:2003-09, in conjunction with DIN 13160-1:2003-09.
The parts of a leak detector designed for installation outdoors must be operational within a temperature range of -20 °C to +60 °C.

Any parts of the leak detector affected by the stored liquids or their vapours or condensate must be made of sufficiently resistant materials. Proof of material suitability must be provided through manufacturer information, publications in the scientific literature, own empirical values or relevant test result. DIN 6601 applies to steel.

2 Specifications for factory production control and initial type testing

DIN EN 13160-1, Annex ZA, Table ZA.1 and Table ZA.3 apply to factory production control and initial type testing. During initial type testing, the operating instructions must be tested in accordance with DIN EN 13160 Section 5.7. The other sections of Annex ZA do not apply.

Draft

3 Marking specifications

For conformity marking, the administrative provision in the Building Regulations, Section C 2, Appendix C 2.15.17 shall be indicated as the decisive technical rule.
Furthermore, when marking construction products, their packaging or accompanying documents, at least the type description, the year of manufacture, the material and performance of the product (pressure and temperature ranges suitable for the following media: ...) must be indicated.

4 Installation specifications

Leak detectors for under- and overpressure systems as part of a class I leak detection system may be used for the following areas of application:

- double-walled containers,
- double-walled pipes,
- single-walled containers with leak detection lining,
- single-walled pipes with leak detection lining,
- single-walled containers with leak detection jacketing,
- single-walled pipes with leak detection jacketing.

Appendix C 2.15.18

1 Construction product requirements

Leak detectors must be designed in accordance with DIN EN 13160-3:2003-09, in conjunction with DIN 13160-1:2003-09.
The parts of a leak detector designed for installation outdoors must be operational within a temperature range of -20 °C to +60 °C.

Any parts of the leak detector affected by the leak detection liquid, stored liquids or their vapours or condensate must be made of sufficiently resistant materials. Proof of material suitability must be provided through manufacturer information, publications in the scientific literature, own empirical values or relevant test result. DIN 6601 applies to steel.

The leak detection liquid must correspond to the "List of leak detection liquids for inspection rooms of double-walled pipes (as at December 2010)", published on the DIBt homepage.

2 Specifications for factory production control and initial type testing

DIN EN 13160-1, Annex ZA, Table ZA.1 and Table ZA.3 apply to factory production control and initial type testing. During initial type testing, the operating instructions must be tested in accordance with DIN EN 13160 Section 5.7. The other sections of Annex ZA do not apply.

3 Marking specifications

For conformity marking, the administrative provision in the Building Regulations, Section C 2, Appendix C 2.15.18 shall be indicated as the decisive technical rule.
Furthermore, when marking construction products, their packaging or accompanying documents, at least the type description, the year of manufacture, the material and performance of the product (pressure and temperature ranges suitable for the following media: ...) must be indicated.

4 Installation specifications

(1) Leak detectors for liquid systems as part of a class II leak detection system may be used for the following areas of application:

- double-walled, pressureless, overground containers,
- single-walled, pressureless, overground containers with leak detection lining,
- single-walled, pressureless, overground containers with leak detection jacketing.

(2) The max. volume of the plant inspection room is 1 m3.

Appendix C 2.16.1

The provisions under Annex E to the standard for monitoring level M apply to the ÜZ certificate of conformity. In derogation from Table E.1, the properties of the materials and components used must be shown by means of works test

certificate 2.3 and the properties of pipes with increased tensile yield point shown by means of acceptance test certificate 3.1 B as per DIN EN 10204.

Mathematical proof of the load-bearing capacity of adjustable steel telescopic piles must be tested under the certification procedure. Testing may be carried out directly by the certification body itself or by a third body appointed by it.

Appendix C 2.16.2

For scaffolding construction parts, the conformity mark and the manufacturer's last two numbers of the year of production, as well as the material class, must be displayed permanently on the scaffolding construction part. If in the technical rules relating to these scaffolding construction parts a mark containing additional characteristics is required these must also be taken into account.

Appendix C 2.16.3

Re DIN 4425:1990-11

Testing for the threaded connection of adjustment nut pipe spindles under Section 7.2 may only be conducted by inspection bodies that are also accredited for conducting initial type testing.

Appendix C 2.16.4

As regards the proof of conformity [certificate of conformity issued by an accredited certification centre], the provisions under Annex B to the standard shall apply to the monitoring level M.

Appendix C 2.16.5

The technical rules apply to steel pipes with the material number: 1.0254.

Appendix C 2.16.6

With the application of the technical rule, the section "Production" of the "Application guideline for supporting frames in accordance with DIN EN 12812", August 2009 version, as published in DIBt Mitteilungen vol. 6/2009 p. 227, is to be used.

Appendix C 2.16.7

The technical rules apply to steel pipes with the material numbers: 1.0254, 1.0421.

Appendix C 2.16.8

The technical rules apply to casting materials with the following material numbers: 1.0420, 1.0446.

Appendix C 2.16.9

Re DIN EN 74-2

Re Section 9.2.2 Slip force F_s of a half coupler

Measurement of the displacement Δ_1 can be dispensed with.

Re Figure. 10:
The abutment shall be mounted on the opposite shoulder of the pipe.

Re Figure. 12:
The test loads “P” and “P/2” shall be replaced by “2P” and “P” respectively.

Figure. B.3 shall be replaced by the following diagram:

Draft

Annexes C 2

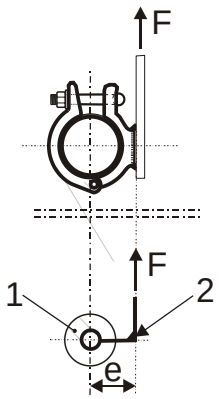

In the equations (B.1) to (B.4), "$F_{s,R,d}$" shall be replaced by "$F_{f,R,d}$".

Appendix C 2.16.10

The provisions under Annex A to the standard for monitoring level M apply to the ÜZ certificate of conformity.

Appendix C 2.16.11

For manufacture, the "Application guidelines for working scaffolding"*), November 2005 edition and for the welding of steel and aluminium components in Annexes A 1.2.4/3 and A 1.2.4/4 must be observed.
Components as per Annex A(A.1) of DIN EN 12810-1:2004-03 qualify as basic components.
Scaffolding parts must be marked as per state conformity regulations. Scaffolding parts must also be easily recognisable and durably marked with

- the capital letter "Ü",
- the manufacturer's labelling,
- an identification label,
- the last two numbers representing the year of manufacture (encoded if necessary) and
- label allocating the scaffolding part to a scaffolding system

Scaffolding parts may only be manufactured by manufacturers whose factory production control is regularly checked at least every 5 years by independent quality control. The manufacturer may itself carry out initial type testing on scaffolding parts that can be assigned to a product group for which initial type testing has been carried out for the manufacturer on at least one scaffolding part by an accredited body.
Welded steel or aluminium scaffolding parts may only be manufactured by firms that have a welding certificate for at least execution class EXC 2 as per DIN EN 1090-1:2010-07 for the scope of application.

*) Published in DIBt Mitteilungen, vol. 2/2006, p. 61 et seq. Available from DIBt.

Appendix C 2.16.12

The technical rules apply to casting materials with the following material numbers: EN-JS 1015, EN-JS 1030.

Appendix C 2.16.13

The technical rules apply to casting materials with the following material numbers: EN-JM 1010, EN-JM 1020, EN-JM 1030, EN-JM 1050.

Draft

C3 Construction products that require only a general building inspectorate test certificate under § 19(1)(2) MBO[1]

The following is ordered on the basis of § 85a(2)(4) MBO[1]:

Item number	Construction product	Recognised test procedure in accordance with	Certificate of compliance
1	2	3	4
C 3.1	Prefabricated ventilation ducts to which requirements on fire resistance and/or sound insulation apply.	Also applicable, depending on construction product: *As regards the fire resistance time:* DIN EN 4102-6:1977-09 and – where applicable - in conjunction with DIN V 4102-21: 2002-08), or DIN EN 1363-1:2012-10, DIN EN 1366-1:2014-12 and DIN V 4102-21:2002-08 in conjunction with Appendix C 3.1 A 2.2.1.2 must also be observed. *As regards sound insulation:* DIN EN ISO 10140-1:2014-09, DIN EN ISO 10140-2, -4:2010-12, DIN EN ISO 10140-5:2014-09, DIN EN ISO 717-1:2013-06	ÜH
C 3.2	Building materials for which there are only requirements concerning behaviour in the event of fire and - which are non-combustible (class DIN 4102-A) with no combustible components, - which are normally flammable (class DIN 4102-B2). Building materials under Section D 2.2 are excluded.	DIN 4102-1:1998-05 together with DIN 4102-16:2015-09 in accordance with A 2.2.1.2, Table 1.2.1	ÜH
C 3.3	Building materials for which there are only requirements concerning behaviour in the event of fire and which are classified as normally flammable (class E). Building materials under Section D 2.2 are excluded.	DIN EN ISO 11925-2:2011-02 in conjunction with Appendix C 3.7 in accordance with A 2.2.1.2, Table 1.2.1	ÜH
C 3.4	Building materials for which there are only requirements concerning behaviour in the event of fire and - which are non-combustible (class DIN 4102-A) with combustible components, - which have low flammability (class DIN 4102-B1), excluding floorings	DIN 4102-1:1998-05 together with DIN 4102-16:2015-09 in accordance with A 2.2.1.2, Table 1.2.1	ÜZ
C 3.5	Floorings with low flammability not intended for use in accommodation areas and that do not meet EN 13813 or EN 14041 or EN 14904 or EN 14342 or EN 15285	DIN 4102-1:1998-05 or together with DIN 4102-16:2015-09 in accordance with A 2.2.1.2, Table 1.2.1	ÜH
C 3.6	Cleaning hatches and soot preventers	Construction and testing principles for cleaning hatches and soot preventers (2012-11)	ÜHP
C 3.7	Appliances and equipment used in water supply installations in relation to which requirements are laid down in terms of noise emission	DIN EN ISO 3822-1:2009-07, DIN EN ISO 3822-2:1995-05, DIN EN ISO 3822-3:2010-04, DIN EN ISO 3822-4:1997-03	ÜHP

[1] Under state laws

Draft

C3 Construction products that require only a general building inspectorate test certificate under § 19(1)(2) MBO[1]

The following is ordered on the basis of § 85a(2)(4) MBO[1]:

Item number	Construction product	Recognised test procedure in accordance with	Certificate of compliance
1	2	3	4
C 3.8	Coatings for concrete, plaster and screed surfaces in collecting trays and catch basins used for storing - EL heating oil, - unused combustion engine and motor vehicle gear oil and - mixtures of saturated and unsaturated hydrocarbons with aromatics content ≥ 20 % by mass and flashpoint of > 55 °C	Principles for construction and testing ([German designation:] BPG) Coatings in collecting areas (2009-02)	ÜZ
C 3.9	Rivet-like and helicoidal joints and attachments for regular cladding for external walls	DIN 18516-1:2010-06 Also applicable: Appendix C 3.2	ÜHP
C 3.10	Wood-fired ovens with open or closed combustion chambers	DIN 18880-2:1991-08 Also applicable: Appendix C 3.3	ÜHP
C 3.11	Metal-plastic composite products for window and door frames under DIN 18056:1966-06 and for main support members	Guideline for demonstrating the stability of metal-plastic composite products Section 3.2 (1986-08)	ÜH
C 3.12	Surface coating materials OS 7 and OS 10 for concrete repairs which are required to maintain the stability of concrete building parts	DafStb Directive Protection and repair of concrete building parts (Maintenance Directive) -SIBR, Part 2 (2001-10) and Part 4 (2001-10) Also applicable: Appendix C 3.4 and DIN 4102-1:1998-05 or DIN EN ISO 11925-2:2011-02 in conjunction with Appendix C 3.7 in accordance with A 2.2.1.2, Table 1.2.1	ÜZ
C 3.13	Adjustable steel telescopic piles whose load-bearing capacity is determined via tests	DIN EN 1065:1998-12	ÜZ
C 3.14	Doors and gates used as smoke barriers excluding curtains	DIN 18095-1:1988-10 DIN 18095-3:1999-06	ÜH
C 3.15	Accessories (unregulated) for smoke barriers, excluding single-axis door hinges and retractable floor seal	DIN 4102-18:1991-03 in conjunction with DIN 18095-1:1988-10	ÜH
C 3.16	Liquid-applied seals for sealing areas that can be driven over	Technical delivery requirements and technical test regulations concerning building materials used in the manufacture of bridge floorings on a concrete base, Part 3 (1995 edition) and Technical delivery requirements and technical test regulations concerning epoxy resins for filling materials, seals and coarse fillers beneath asphalt coverings on a concrete base (1999 edition) Also applicable: DIN 4102-1:1998-05 or DIN EN ISO 11925-2:2011-02 in conjunction with Appendix C 3.7 in accordance with A 2.2.1.2, Table 1.2.1	ÜZ
C 3.17	Independently closing nozzles	DIN EN 13012:2002-03	ÜHP
C 3.18	Prefabricated safety barrier glazing	DIN 18008-4:2013-07,	ÜH

[1] Under state laws

Draft

C3 Construction products that require only a general building inspectorate test certificate under § 19(1)(2) MBO[1]

The following is ordered on the basis of § 85a(2)(4) MBO[1]:

Item number	Construction product	Recognised test procedure in accordance with	Certificate of compliance
1	2	3	4
	with load-bearing capacity determined by testing under impact load	in accordance with Annex A, Annex D and Annex E: Also applicable: Appendix C 3.5	
C 3.19	Point holder without ball joint with load-bearing capacity determined via testing	DIN 18008-3:2013-07, Annex D	ÜH
C 3.20	Prefabricated glazing designed to sustain human loads with load-bearing capacity determined by testing under impact load	DIN 18008-5:2013-07, Annex A	ÜH
C 3.21	Highly fire-retardant components whose load-bearing, stiffening and space-enclosing parts are of wood or wood materials and that have a fire-retardant covering from non-flammable materials (fire-resistant lining) and insulation materials from non-flammable materials on all sides	*for the requirements on safety in case of fire:* Guideline on fire protection requirements for highly fire-retardant components in timber construction - HFHHolzR (2004-07) in accordance with A 2.2.4 *As regards sound insulation:* DIN EN ISO 10140-1:2014-09, DIN EN ISO 10140-2, -4:2010-12, DIN EN ISO 10140-3: 2015-11, DIN EN ISO 10140-5:2014-09, DIN EN ISO 717-1, -2:2013-06 *As regards protection against falling:* ETB Guideline "Components that protect against falls" (1985-06)	ÜZ
C 3.22	Coating and enclosure systems for refurbishment of timber components contaminated with pentachlorphenol (PCP)	Test plan for refurbishment of timber components contaminated with pentachlorphenol (PCP) (2005-10)	ÜHP
C 3.23	Seamless circular pipes of non-alloy steel pursuant to EN 10216-1 for use on steel chimneys	DIN EN 10045-1:1991-04	ÜHP
C 3.24	Welded circular pipes of non-alloy steel pursuant to EN 10217-1 for use on steel chimneys	DIN EN 10045-1:1991-04	ÜHP
C 3.25	Materials for sealing components in contact with the ground against pressing water in transition to waterproof components	Testing principles regarding the issuing of general building inspectorate test certificates for transitions from structural waterproofing to concrete building components with a high resistance to water penetration (2010-09)	ÜHP
C 3.26	Mineral sealing slurries for construction seals	Testing principles for the issuing of general building test certificates for construction seals with mineral sealing slurries (PG-MDS) (2014-01)	ÜHP

[1] Under state laws

Draft

C3 Construction products that require only a general building inspectorate test certificate under § 19(1)(2) MBO[1]

The following is ordered on the basis of § 85a(2)(4) MBO[1]:

Item number	Construction product	Recognised test procedure in accordance with	Certificate of compliance
1	2	3	4
C 3.27	Seals in conjunction with tiles and slab coverings - for walls and floors inside and outside, where these are connected with buildings, against non-pressurised water with higher stress such as in wet areas in the public and civil sector - for containers and basins located inside or outside, where these are connected to buildings against fill water such as with swimming pools	Testing principles for the granting of general building test certificates for seals in connection with tiles and slab surfaces - Part 1: Liquid-applied seals (PG AIV-F) (2014-05), - Part 2: Sheet-type seals (PG AIV-B) (2014-05), - Part 3: Slab-type seals (PG AIV-P) (2012-08)	ÜHP
C 3.28	Waterproofing buildings using fluid synthetic materials	Testing principles regarding the issuing of a general building inspectorate test certificate for waterproofing buildings using fluid synthetic materials (PG-FLK) (2010-06)	ÜHP
C 3.29	Waterproofing roofs with fluid synthetic materials	Testing principles regarding the issuing of general building inspectorate test certificates for waterproofing roofs using fluid synthetic materials Appendix C 3.6	ÜHP
C 3.30	Waterproofing for construction joints and cross sections with controlled cracks in concrete components with high resistance to water penetration that cannot be allocated under products C 2.10.2 and C 2.10.3 in Section C 2	Testing principles regarding the issuing of general building inspectorate test certificates for joint sealants in concrete components with a high resistance to water penetration (PG-FBB Part 1: waterproofing for construction joints and cross sections with controlled cracks (2012-10))	ÜHP

Draft

[1] Under state laws

Annexes C 3

Appendix C 3.1

1 Non-load-bearing dividing walls

A non-load-bearing dividing wall can be classified as F ... under DIN 4102 if it

- complies with the conditions under DIN 4102-2

or

- has been tested according to DIN EN 1363-1 in conjunction with DIN EN 1364-1/NA, during which it complied with the requirements under DIN EN 1363-1, Section 11.2 Space Barrier and Section 11.3 Thermal insulation for ... minutes.

For testing according to DIN EN 1363-1 in conjunction with DIN EN 1364-1, a fire test is required for symmetrical components.

2 Load-bearing space-enclosing walls

A non-load-bearing space-enclosing wall can be classified as F ... under DIN 4102 if it

- complies with the conditions under DIN 4102-2

or

- has been tested according to DIN EN 1363-1 in conjunction with DIN EN 1365-1/NA, during which it complied with the requirements under DIN EN 1363-1, Section 11.1 Load-Bearing Capacity, number II as well as Section 11.2 Space Barrier and Section 11.3 Thermal insulation for ... minutes.

For testing according to DIN EN 1363-1 in conjunction with DIN EN 1365-1, a test is required for symmetrical components.

3 False ceilings (as a stand-alone structural component)

A false ceiling as a stand-alone structural component can be classified as F ... under DIN 4102 if it

- complies with the conditions under DIN 4102-2

or

- has been tested according to DIN EN 1363-1 in conjunction with DIN EN 1364-2/NA, during which it complied with the requirements under DIN EN 1364-2, Section 11.2 Space barrier and Section 11.3 Thermal insulation for ... minutes.

For testing according to DIN EN 1363-1 in conjunction with DIN EN 1364-2, a stress test is required on the underside and on the topside. If classification is only to be done on one side, a stress test on this side is required.

4 Columns

A column can be classified as F ... under DIN 4102 if it

- complies with the conditions under DIN 4102-2

or

- has been tested according to DIN EN 1363-1 in conjunction with DIN EN 1365-4/NA, during which it complied with the requirements under DIN EN 1363-1, Section 11.1 Load-Bearing Capacity, number II for ... minutes.

For testing according to DIN EN 1363-1 in conjunction with DIN EN 1365-4, a test is required.

5 Fire walls

A fire wall can be classified as F ... under DIN 4102 if it

- complies with the conditions under DIN 4102-3

or

Draft

Annexes C 3

- has been tested according to DIN EN 1363-1 in conjunction with DIN EN 1365-1/NA and DIN EN 1363-2, Section 7, during which it complied with the requirements under DIN EN 1363-1, Section 11.1 Load-Bearing Capacity, number II as well as Section 11.2 Space Barrier and Section 11.3 Thermal insulation for 90 minutes.

The walls must meet these requirements without cladding. They must also be made of non-combustible materials.

For testing according to DIN EN 1363-1 in conjunction with DIN EN 1365-1 and DIN EN 1363-2, Section 7, a test is required for symmetrical components.

6 Ventilation ducts

A ventilation duct with external dimensions of 1 250 mm x 1 000 mm < W x H ≥ 2 500 mm x 1 250 mm or an external diameter of 1 000 mm < D ≥ 1 250 mm can be classified as L ... under DIN 4102 if

- it has been tested according to DIN V 4102-21, during which it complied with the requirements under DIN V 4102-21 Section 5.2 and – where applicable – Section 5.3 for ... minutes

and if

- a ventilation duct with the same design (material, material thickness, connection technology, mounting) under DIN EN 1363-1 in conjunction with DIN EN 1366-1 for the dimensions set out in DIN EN 1366-1 was previously tested and classified under DIN EN 13501-3.

7 Beams/joists

A beam/joist can be classified as F ... under DIN 4102 if it

- complies with the conditions under DIN 4102 2

or

- has been tested according to DIN EN 1363 1 in conjunction with DIN EN 1365 3, during which it complied with the requirements under DIN EN 1363 1, Section 11.1 Load-Bearing Capacity, number I for ... minutes.

For testing according to DIN EN 1363 1 in conjunction with DIN EN 1365 3, a test is required.

8 Ceilings/roofs

A ceiling/roof can be classified as F ... under DIN 4102 if it

- complies with the conditions under DIN 4102 2

or

- has been tested according to DIN EN 1363 1 in conjunction with DIN EN 1365 2, during which it complied with the requirements under DIN EN 1363 1, Section 11.1 Load-Bearing Capacity, number II as well as Section 11.2 Space Barrier and Section 11.3 Thermal insulation for ... minutes.

For testing according to DIN EN 1363 1 in conjunction with DIN EN 1365 2, a test is required.

9 Pipe encasements/pipe seal

A pipe encasement/pipe seal can be classified as R ... under DIN 4102 if it complies with the conditions under DIN 4102 11 with testing

- in accordance with DIN 4102-11 (including Appendix 19) has been conducted

or

- in accordance with DIN 4102-11 but with modified test conditions in line with DIN EN 1366-3:2009-07, Section 5 has been conducted: Furnace temperature is controlled as per DIN 1363-1:1999-10, Section 5.1 with furnace thermocouples as per Section 4.5.1.1 and testing begins as per DIN EN 1363-1:1999-10, Section 10.3. The pressure conditions in the fire compartment are in line with DIN EN 1366-3:2009-07, Section 5.2.

Draft

Annexes C 3

10 Service shafts and ducts

A service shaft/duct can be classified as I ... under DIN 4102 if it

- complies with the conditions under DIN 4102-11

or

- consists of walls tested as per DIN 4102-2,

or

- consists of walls tested as per DIN EN 1363-1 in conjunction with DIN EN 1364-1, during which it complied with the requirements under DIN EN 1363-1, Section 11.2 Space Barrier and Section 11.3 Thermal insulation for ... minutes.

For testing according to DIN EN 1363-1 in conjunction with DIN EN 1364-1, a fire test is required for symmetrical components.

Appendix C 3.2

The characteristic load-bearing capacity value for the joints and attachments is the 5 % quantile with 75 % confidence coefficient established each time from the test results.

Appendix C 3.3

The test procedures under DIN 18880-2:1991-08 and DIN 18880-1:1991-08 must be restricted to the relevant conditions for the use of logs and for operation as pizza ovens. In particular these are:

DIN 18880-1:1991-08, Section 5, excluding Section 5.7.3

DIN 18880-2:1991-08, Section 6, excluding Section 6.3

In respect of the installation and operating instructions, DIN 18880-2:1991-08, Section 7 must be observed, and for labelling and lettering, DIN 18880-2:1991-08, Section 8 must be observed.

Appendix C 3.4

The general building inspectorate test certificate for the various surface coating materials may also be issued on the basis of the TL/TP OS regulations (1996 edition).

Appendix C 3.5

For test proof of load-bearing capacity of punctiform storage structures (point holders), item no. C 3.19 applies.

For double-sided linear-mounted single-pane glazing, category A, instead of the test required under the last sentence in Chapter A.1.9, the impact glass plate may alternatively be broken with the grains, which then must be tested by pendulum impact with a drop height of 450 mm.

Appendix C 3.6

The test principles consist of the test procedures described in Chapters 2 - 7 in ETAG 005 "Liquid-applied roof waterproofing", Parts 1 to 8, published in the Federal Gazette, Jg. 53, No. 200a 25 October 2001 and Jg. 57, No. 102a, 04 June 2005. The application rules set out in Section B 2.2.10 must also be observed.

Appendix C 3.7

A building material may also be classified under B2 as per DIN 4102, if the test results under DIN EN ISO 11925-2 comply with the prerequisite of DIN 4102-1 Section 6.2.2.

Draft

Annexes C 3

Testing under DIN EN ISO 11925-2 must be carried out for edge flaming (Section 7.3.3.2 of the standard) and, where failure is expected, for surface flaming (Section 7.3.3.1 of the standard). The specifications of DIN 4102-1 Sections 6.2.5.2, 6.2.5.5 and 6.2.5.6 must be observed during testing.

Note:
It should be noted that the conditions in Appendix C 3.7 set out preliminary decision in the absence of harmonised European specifications. Future harmonised product specifications may set out other test conditions that require further testing.

Draft

C4 Designs that require only a general building inspectorate test certificate under § 16a(3) MBO[1]

The following is ordered on the basis of § 85a(2)(4) MBO[1]:

C 4.1	Designs relating to the construction of ceilings, roofs, suspended ceilings, false floors, cavity flooring, supports, beams, ceiling joists, stairs and load-bearing walls in relation to which requirements pertaining to fire resistance time and/or sound insulation are laid down. This does not apply to the parts of structural works which are subject to additional requirements if the definitive designs deviate significantly from Technical Building Regulations or if the definitive designs are not covered by any generally recognised rules of the trade.	Also applicable, depending on design: *As regards the fire resistance time:* DIN 4102-2:1977-09 with the exception of Sections 6.2.7, 6.2.9 and 6.2.10 (for DIN 4102-3:1977-09 fire walls), or DIN EN 1363-1:2012-10, DIN EN 1363-2:1999-10, DIN EN 1364-2:1999-10, DIN EN 1365-1:2013-08, DIN EN 1365-2, -3: 2000-02, DIN EN 1365-4:1999-10 in conjunction with Appendix C 3.1 of Section C 3 A 2.2.1.2 must also be observed. *As regards sound insulation:* DIN EN ISO 10140-1:2014-09, DIN EN ISO 10140-2, -4:2010-12, DIN EN ISO 10140-3: 2015-11, DIN EN ISO 10140-5:2014-09, DIN EN ISO 717-1, -2:2013-06 as well as DIN EN ISO 10848-1, -2, -3:2006-08
C 4.2	Designs relating to the construction of non-load-bearing, internal dividing walls, including fittings (e.g. sanitation), the anti-fall safety of which must be demonstrated experimentally and/or are subject to requirements in terms of fire resistance time and/or sound insulation, with the exception of those made of glass. The second sentence of item no. C 4.1 applies accordingly.	Also applicable, depending on design: *As regards protection against falling:* DIN 4103-1: 2015-06 The following characteristics are each to be met together with the requirements of DIN 4103-1:2015-06: *As regards the fire resistance time:* DIN 4102-2:1977-09 apart from Sections 6.2.7 and 6.2.9 or DIN EN 1363-1:2012-10, DIN EN 1363-2:1999-10, DIN EN 1364-1:1999-10 in conjunction with Appendix C 3.1 of Section C 3 A 2.2.1.2 must also be observed. *As regards sound insulation:* DIN EN ISO 10140-1:2014-09, DIN EN ISO 10140-2, -4:2010-12, DIN EN ISO 10140-5:2014-09 DIN EN ISO 717-1:2013-06 and DIN EN ISO 10848-1, -2, -3:2006-08
C 4.3	Designs for the construction of non-load-bearing outer walls to which requirements on fire resistance and sound insulation apply. The second sentence of item no. C 4.1 applies accordingly.	Also applicable, depending on design: *As regards the fire resistance time:* DIN 4102-3:1977-09 or DIN EN 1363-1:2012-10, DIN EN 1363-2:1999-10, DIN EN 1364-1:1999-10 in conjunction with Appendix C 3.1 of Section C 3 A 2.2.1.2 must also be observed. *As regards sound insulation:* DIN EN ISO 10140-1:2014-09, DIN EN ISO 10140-2, -4:2010-12, DIN EN ISO 10140-5:2014-09, DIN EN ISO 717-1:2013-06 and DIN EN ISO 10848-1, -2, -3:2006-08 *As regards protection against falling:* ETB Guideline "Components that protect against falls" (1985-06)
C 4.4	Designs for the construction of ventilation ducts to which requirements on fire resistance and/or sound insulation apply. The second sentence of item no. C 4.1 applies accordingly.	Also applicable, depending on design: *As regards the fire resistance time:* DIN EN 4102-6:1977-09 and – where applicable – in conjunction with DIN V 4102-21:2002-08 or DIN EN 1363-1:2012-10, DIN EN 1366-1:2014-12 and – where applicable –

[1] Under state laws

Draft

C4 Designs that require only a general building inspectorate test certificate under § 16a(3) MBO[1]

Item number	Design	Recognised test procedure in accordance with
	2	3
		in conjunction with DIN V 4102-21:2002-08 in conjunction with Appendix C 3.1 of Section C 3 A 2.2.1.2 must also be observed. *As regards sound insulation:* DIN EN ISO 10140-1:2014-09, DIN EN ISO 10140-2, -4:2010-12, DIN EN ISO 10140-5:2014-09 DIN EN ISO 717-1:2013-06
C 4.5	Designs for pipe bulkheads on metal pipes (heat-insulated where applicable), - whose function is based on a pipe encasement/section insulation layout - in relation to which requirements are only laid down in terms of fire resistance time. The second sentence of item no. C 4.1 applies accordingly.	DIN 4102-11:1985-12 in conjunction with Appendix C 3.1 of Section C 3 and Appendix C 4.2
C 4.6	Designs for pipe bulkheads on thermoplastic pipes (heat-insulated where applicable), - whose function is based on a pipe encasement/section insulation layout and - for which no intumescent building materials are used and - in relation to which requirements are only laid down in terms of fire resistance time. The second sentence of item no. C 4.1 applies accordingly.	DIN 4102-11:1985-12 in conjunction with Appendix C 3.1 of Section C 3 and Appendix C 4.2
C 4.7	Designs for the construction of installation shafts and ducts including the connections to their inspection openings to which requirements on fire resistance and sound insulation apply. The second sentence of item no. C 4.1 applies accordingly.	Also applicable, depending on design: *As regards the fire resistance time:* DIN 4102-11: 1985-12 and/or plus, as test procedures for installation shaft walls DIN 4102-2:1977-09 apart from Sections 6.2.7 and 6.2.9 in conjunction with Appendix C 3.1 of Section C 3 or DIN EN 1363-1:2012-10, DIN EN 1363-2:1999-10, DIN EN 1364-1:1999-10 in conjunction with Appendix C 3.1 of Section C 3 A 2.2.1.2 must also be observed. *As regards sound insulation:* DIN EN ISO 10140-1:2014-09, DIN EN ISO 10140-2, -4:2010-12, DIN EN ISO 10140-5:2014-09, DIN EN ISO 717-1:2013-06
C 4.8	Designs for manufacture of roofing, for which there are requirements regarding resistance to spreading of fires and radiating heat. The second sentence of item no. C 4.1 applies accordingly.	DIN 4102-7:1998-07 in conjunction with DIN SPEC 4102-23:2011-10 Sections 1, 2, 3, 4 and 7 or DIN CEN/TS 1187:2012-03 Test method 1 in conjunction with DIN SPEC 4102-23:2011-10 Sections 1, 2, 3, 4 and 7 or DIN CEN/TS 1187:2012-03 Test method 1 in conjunction with DIN CEN/TS 16459:2014-03 Sections 1, 2, 3, 4, 7 and Annex A A 2.2.1.2 must also be observed.
C 4.9	Designs for manufacturing electrical cable systems for which there are requirements regarding functional integrity under fire exposure. The second sentence of item no. C 4.1 applies	DIN 4102-12:1998-11

[1] Under state laws

Draft

C4 Designs that require only a general building inspectorate test certificate under § 16a(3) MBO[1]

Item number	Design	Recognised test procedure in accordance with
	2	3
	accordingly.	
C 4.10	Designs for the construction of smoke extraction ducts to which requirements on fire resistance and/or sound insulation apply. The second sentence of item no. C 4.1 applies accordingly.	Also applicable, depending on design: *As regards the fire resistance time:* DIN 4102-6: 1977-09 DIN V 18232-6:1997-10 in conjunction with Appendix C 4.3 or DIN EN 1363-1:2012-10, DIN EN 1366-1:2014-12 in conjunction with DIN EN 1366-8:2004-10 in conjunction with Appendix C 4.4 A 2.2.1.2 must also be observed. *As regards sound insulation:* DIN 52210-6:2013-07
C 4.11	Designs for the construction of smoke extraction ducts to which no requirements on fire resistance and/or sound insulation apply. The second sentence of item no. C 4.1 applies accordingly.	DIN V 18232-6:1997-10 in conjunction with Appendix C 4.5
C 4.12	Safety barrier glazing with load-bearing capacity determined by testing under impact load	DIN 18008-4:2013-07, Annex A, Annex D and Annex E; Also applicable: Appendix C 3.5 of Section C 3
C 4.13	Glazing designed to sustain human loads with load-bearing capacity determined by testing under impact load	DIN 18008-5:2013-07, Annex A

Draft

[1] Under state laws

Annexes C 4

Appendix C 4.1

Re DIN 4102-11: 1985-12

Re Section 3.1 Verification with fire tests
By way of deviation from Section 3.1, one specimen will be sufficient for the fire test.

Re Section 4.2.3 Specimens and test set-up
In deviation from Section 4.2.3, the performance of fire tests on pneumatic tube lines and dust intake pipes at a working pressure of -0.5 bar is dispensed with.

Re Section 4.2.4.1 Fire test with minimal stress
Section 4.2.4.1 lapses.

Re Section 4.2.4.2 Fire test with the standard temperature-time curve
In deviation from Section 4.2.4.2, the measuring points for determining the mean temperature increase at a distance of 10 cm and 60 cm from the wall or ceiling are dropped.

Re Section 4.2.4.3 Fire test with stress due to smouldering fire
Section 4.2.4.3 lapses.

Appendix C 4.2

In derogation of DIN V 18232-6 leakage from the category 3 smoke extractor duct in the aforementioned standard must be determined under fire stress using the oxygen measurement method set out in DIN EN 1366-8:2004-10 for pressure levels 1 or 2 or 3 as set out therein.

Appendix C 4.3

A smoke extractor duct can be classified as category 3 under DIN V18232-6 if it passes the tests under DIN EN 1366-1 (duct A at pressure of -500 Pa) and meets the requirements under DIN EN 1366-8, Section 11.3.2, Sealing; under Section 11.3.3, Space barrier; under Section 11.3.4 Thermal insulation and under Section 11.3.5 Cross-section reductions during the test time of ≤ 30 minutes at temperature stress under DIN EN 1363-1.

Appendix C 4.4

In derogation of DIN V 18232-6 leakage from the category 2 smoke extractor duct in the aforementioned standard must be determined under fire stress using the oxygen measurement method set out in DIN EN 1366-8:2004-10 for pressure levels 1 or 2 or 3 as set out therein.

Draft

D Construction products that do not require evidence of usability

D 1 General

Under § 17(2) MBO[11] the administrative provision contains a non-exhaustive list of construction products that do not require evidence of usability (§ 85a(4) MBO). This list provides clarification for those involved in the build.

On the one hand, the list includes construction products for which there are generally accepted technical standards and on which the building regulations also impose requirements pursuant to § 3 MBO[1], but for which evidence of usability is not required (formerly "other construction products"). Usability of construction products as defined in § 16b MBO[1] must physically exist but this does not need to be demonstrated under the building regulations. These include in particular construction products covered by other certification and approval systems (e.g. DVGW and VDE).

On the other hand, it also includes construction products for which there are neither technical building regulations nor generally accepted technical standards and for which compliance with the requirements under § 3 MBO[1] are irrelevant. The waiver of building inspectorate evidence of usability identifies the minor significance of these construction products in terms of the building regulations.

D 2 List pursuant to § 85a(4) MBO[Error! Bookmark not defined.]

D 2.1 Examples of products that are not covered by generally accepted technical standards

- Barrier mountings in water supply and disposal plants
- Barrier installations in gas supply plants
- Flow monitors
- Gas installation safety equipment
- Gas hose safety lines for connection to domestic gas appliances
- Multi-layer composite piping for domestic gas installations
- Liquid gas pressure regulators
- Drinking water heaters and storage devices
- Hot-water surface heating systems and radiator connections
- Plastic piping systems for hot-water underfloor heating
- Heat transfer systems
- Sanitary appliances
  - Washbasins
  - Toilets
- Shafts for wells and percolation systems
- Percolation pipes for landfills
- Lightning protection installations
- Electrical installations such as cables, switches, sockets, etc. for general power supply under standard conditions in physical structures
- Telecommunications, television and radio installations

1 Under state laws

D Construction products that do not require evidence of usability

D 2.2 Products that are not covered by generally accepted technical standards

This list only applies to construction products and uses that require only normal inflammability (DIN 4102-B2) under building inspection regulations and for which no further fire protection requirements or sound proofing and thermal insulation have been laid down.

D 2.2.1 Construction products relating to construction of the shell

D 2.2.1.1 Basement light wells with light well openings up to 1.50 m (clear width parallel to basement wall) x 1.0 m (clear width to basement wall)

D 2.2.1.2 Drainage elements

D 2.2.1.3 External wall infill including fastenings with support spacing of ≥ 1.0 m if not used to ensure the stability of a physical structure or parts thereof

D 2.2.1.4 Masonry reinforcement not required to ensure masonry stability

D 2.2.1.5 Auxiliary materials for construction work and roof waterproofing such as primers, protective coatings, separation layers, protective layers, joint fillings and auxiliary materials for connections and barriers

D 2.2.1.6 Façade sealing to protect against wind and driving rain

D 2.2.1.7 Water-repellent agents against capillary absorption and transport of water with the exception of those required to maintain the stability of concrete components

D 2.2.1.8 Construction products for dehumidification of damp walls, excluding products that harden in direct contact with groundwater or the soil

D 2.2.1.9 Plywood and formwork panels as well as shuttering units as lost formwork

D 2.2.1.10 Elastic bearing for stairs

D 2.2.1.11 Wall and roof components, including fastenings, for single-storey physical structures with enclosed space ≥ 30 m^3

D 2.2.1.12 Multi-layer separating layers (e.g. "sliding film") to enable relative displacements between components for uses for which the failure or impairment of component function have no effects on the stability or sealing of the load-bearing structure in respect of the storage of water-polluting liquids.

D 2.2.1.13 Bentonite mats used as additional sealing measures for concrete components with high resistance to water penetration

D 2.2.1.14 Plastic slatted floors with clearance to load-bearing floor slabs or load-bearing ceilings of ≥ 0.5 m

D 2.2.1.15 Products used to seal laps, joints, and connections of rubber vapour control layers and other draught-proofing layers (e.g. sealing tapes, adhesive tapes)

D 2.2.1.16 Separation layers between floating screeds and footfall sound insulating layers as well as separation layers between building components and building components for acoustic decoupling

D 2.2.2 Construction products relating to interior work

D 2.2.2.1 Façade elements (including fastenings) for external wall cladding attached according to generally accepted technical standards

- with small-format cladding panels with an area of ≥ 0.4 m^2 and a dead weight of ≥ 5 kg
- with board format cascade elements with a width of ≥ 0.3 m and a substructure support spacing of ≥ 0.8 m

D 2.2.2.2 Roofing elements (including fastenings) for roof cladding attached according to generally accepted technical standards

- with small-format elements with an area of ≥ 0.4 m^2 and a dead weight of ≥ 5 kg
- with other elements with a substructure support spacing of ≥ 1.0 m excluding glass

D 2.2.2.3 Internal doors including accessories

D 2.2.2.4 Non-load-bearing and non-stiffening window and door openings, window sills and their fastenings

D 2.2.2.5 Double floors and hollow screed with clear width to load-bearing ceilings of ≥ 0.5 m

D 2.2.2.6 External wall cladding up to 2 cm thick

D 2.2.2.7 Floorings not intended for use in accommodation areas

Draft

D Construction products that do not require evidence of usability

D 2.2 Products that are not covered by generally accepted technical standards

D 2.2.2.8 Infill for protectors including fastenings:
- plated infill with substructure support spacing ≥ 1.0 m, excluding glass infills
- infill span wire system attached under a load-bearing handrail or balustrade with span width ≥ 2.0 m

D 2.2.2.9 Edge insulating strips for screed

D 2.2.2.10 Support and aprons for bath tubs and shower trays

D 2.2.2.11 Seals against non-pressurised water at low or moderate stress, such as for sealing balconies, splash-prone floor and wall areas in wet rooms and domestic bathrooms

D 2.2.2.12 O-ring seals for pipe openings and seals of formwork tie points for external components in contact with the ground on which no requirements are imposed in respect of fire prevention

D 2.2.2.13 Snow guard devices that do not support loads as per DIN EN 1991-1-3:2010, Section 6.4 and DIN EN 1991-1-3/NA:2010, NCI re 6.4 (1)

D 2.2.2.14 Construction products of mineral building materials and polymer concrete for cladding internal walls

D 2.2.2.15 Wedges and blocks for adjusting components not used for storage as defined in DIN 4141-1

D 2.2.2.16 Elastic elongation elements for metallic components in roofs and walls

D 2.2.2.17 Bonding courses for gypsum plaster systems

D 2.2.2.18 Reinforcements of façade elements for external wall cladding where these are not required to ensure stability

D 2.2.2.19 Mobile dividing walls

D 2.2.2.20 Air-permeable fabric (dead load ≥ 1.0 kg/m2), including the fastening, positioned on a substructure that is stable on its own for positioning as wind breaks on halls, as roofing on single-storey buildings and structural works or for affixing to the exterior. The substructure must be capable of reliably dissipating the loads exerted under the assumption of fabric which is not permeable to air.

D 2.2.2.21 Fastenings of insulating materials on internal walls, excluding synthetic-resin adhesives

D 2.2.2.22 Adhesives and/or dowels (anchors) on insulating materials on internal ceilings if overall weight from thermal insulation and coatings does not exceed 15 kg/m^2; the use of synthetic-resin adhesives in internal areas is excluded.

D 2.2.2.23 Sliding latter with opening barrier

D 2.2.3 Construction products for building automation

D 2.2.3.1 Flame catalysts

D 2.2.3.2 Oil burners

D 2.2.3.3 Ventilation ducts including accessories

D 2.2.3.4 Prefabricated installation shafts and ducts including inspection openings

D 2.2.3.5 Casings and claddings of flues to the outdoors including related substructures and cover plates and joint seals for openings from flues of non-combustible building materials as per DIN 4102-4:1994-03, Section 2

D 2.2.3.6 Subordinated accessories of flues not exposed to waste gas (components for condensate discharge or rear ventilation, spacers, wall mountings, etc.)

D 2.2.3.7 Fastenings for pipe encasements

D 2.2.3.8 Latent heat accumulator elements of encapsulated calcium chloride ($CaCl_2$ x 6 H_2O) for underfloor heating, provided the encapsulation is suitable for purpose

D 2.2.3.9 Smoke flues in necessary stairwells not used for extracting smoke but for removing smoke after evacuation

D 2.2.3.10 Heating and cooling surfaces on ceilings and walls

D 2.2.3.11 Radiator covers

D 2.2.3.12 Components outside buildings for aerating and ventilating the building and for site drainage (excluding vent valves under DIN EN 12380)

D 2.2.3.13 Daylight control systems with cross-sectional area ≤ 0.4 m ^{2}

D 2.2.4 Construction products for landfills

D 2.2.4.1 Draining pipes for landfill sealing

Draft

D Construction products that do not require evidence of usability

D 2.2 Products that are not covered by generally accepted technical standards

D 2.2.4.2 Drainage elements for landfill sealing

D 2.2.4.3 Landfill sealing elements

D 2.2.4.4 Protective layers for landfill sealing elements

D 2.2.5 Construction products for repair

D 2.2.5.1 Construction products for repairs to construction seals and related installation components, excluding products that harden in direct contact with groundwater or the soil

D 2.2.5.2 Construction products for repairs to roof waterproofing and related installation components

D 2.2.6 Other construction products

D 2.2.6.1 Construction parts for water basins with ≥ 100 m^3 capacity

D 2.2.6.2 Pressureless containers with up to 50 m^3 volume and up to 3 m high for storing rain and drinking water

D 2.2.6.3 Sample and pattern encoders and spacers for paving

D 2.2.6.4 Supporting elements used with height difference of up to 1.0 m

D 2.2.6.5 Plastic components for water slides up to 2.0 m high

D 2.2.6.6 Rigid and flexible bulk goods silos with capacity up to 3 m^3 and up to 3 m high (top edge of silo above ground)

D 2.2.6.7 Non-accessible covers for containers under which there are no trafficked areas and which do not serve to stabilise structural facilities or their parts. The covers must be exposed to a maximum inner pressure of 50 mbar.

D 2.2.6.8 Construction products for building-independent solar systems in areas not open to the public up to 3 m high

Draft

D 3 Technical documentation pursuant to § 85a(2)(6) MBO[1]

In relation to the essential characteristics of a construction product covered by the harmonised technical specifications underlying CE marking, the CE mark is the only marking (Article. 8(3)(1) CPD). Otherwise, other product information may be provided voluntarily. In this case, the accuracy thereof must be shown in the technical documentation. Depending on the product, installation situation and purpose of use, this may require stating in technical documentation which technical rule the test is based on and whether any bodies have been appointed and if so which ones. For example, it may be advisable to appoint a body qualified under Article. 30 CPD unless there are applicable, accepted technical standards or a body qualified under Article. 43 CPD, provided only independent third-party testing is carried out using an applicable technical rule.

Draft

[1] Under state laws

Annex

Technical rules – Subsequent rebar connections

Technical rule – Anchors in concrete

Technical Rule – Anchors in masonry

Technical Rule – Building inspectorate requirements, classification in classes, use of construction products, use of designs[6]

Technical Rule – WDVS with EPS, Socket fire test procedure

Technical Rule – Rear-ventilated external wall cladding

Technical Rule – Requirements for locking mechanisms

Health protection requirements for physical structures ([German designation: Anlagen bezüglich des Gesundheitsschutzes;] ABG)

Technical Rule – Textile floorings

Requirements for physical structures regarding effects on soil and water (ABuG)

Technical Rule – Thermal Insulation System [WVDS] with ETA as per ETAG 004

Technical Rule – Application rules for non-load-bearing permanent formwork kits/systems and formwork blocks for the construction of in-situ concrete walls (TR formwork blocks)

Directive on roller shutters - RokR -

Technical Rule on provisions for the manufacture of heat-soaked thermally toughened soda-lime safety glass (ESG-H)

Draft

1. Scope of Application

This Technical Rule applies to steel rebar connections under DIN 488 or in line with general building inspectorate approval bonded-in using an injection system with European Technical Assessment/Approval (ETA) as per EOTA Technical Report TR 023 "Assessment of subsequent rebar connections" or EAD 330087-00-0601 "Systems for subsequent rebar connections with mortar".
The possible areas of application are set out in Annex 1
Figure 1 to
Figure 5.

2. Planning

Rebar connections must be designed in line with engineering practice. In compliance with the following points, verifiable design drawings must be drawn up.

- Rebar connections may only be used to transfer tension forces in the direction of the bar axis.
- The position of reinforcement set in concrete must be determined based on the planning documents and, where applicable, marked on the concrete surface
- The concrete strength class of the anchor base must be determined based on the planning documents and, where applicable, core sampling
- Transfer of transverse forces between existing and new concrete must be demonstrated in line with DIN EN 1992-1-1/NA:2011-01. The joints for concreting must be roughened to at least such an extent that aggregates protrude. *Note: Information on how to perform the roughening must be supplied in the design drawings (e.g. as per DIN EN 1992-1-1).*
- Where the surface of the existing concrete is carbonated, the carbonated layer must be removed before connecting the new bar near the rebar connection with a diameter of ϕ + 6 cm. The depth of the concrete to be removed must at least meet the minimum concrete covering for the corresponding environmental conditions under DIN EN 1992-1-1 and DIN EN 1992-1-1/NA. This does not apply in the case of new, non-carbonated components dry surroundings.
- general construction rules as per Annex 2
- minimum concrete covering c_{min} as per Table 1 and minimum clearance a as per Table 2
- Drill procedure

Table 1 Minimum concrete covering c_{min} [mm] depending on drill procedure, bar diameter and on the use of a drilling aid

Drill procedure	Bar diameter	Without drilling aid	With a drilling aid
Hammer drilling hollow drilling diamond drilling	ϕ < 25 mm	c_{min} = 30 mm + 0.06 $\ell_v \leq 2\,\phi$	c_{min} = 30 mm + 0.02 $\ell_v \leq 2\,\phi$
	$\phi \leq$ 25 mm	c_{min} = 40 mm + 0.06 $\ell_v \leq 2\,\phi$	c_{min} = 40 mm + 0.02 $\ell_v \leq 2\,\phi$
Compressed air drilling	ϕ < 25 mm	c_{min} = 50 mm + 0.08 ℓ_v	c_{min} = 50 mm + 0.02 ℓ_v
	$\phi \leq$ 25 mm	c_{min} = 60 mm + 0.08 $\ell_v \leq 2\,\phi$	c_{min} = 60 mm + 0.02 $\ell_v \leq 2\,\phi$

Table 2 minimum clearance a [mm] depending on in the use of a drilling aid and on bar diameter

Without drilling aid	With a drilling aid
a = 40 mm $\leq 4\,\phi$	a $\leq 2\,\phi$

Draft

3. Dimensioning

Rebar connections must be designed in line with engineering practice. Verifiable calculations must be made taking into account the loads to be anchored.

Rebar connections must be designed as per DIN EN 1992-1-1 and DIN EN 1992-1-1/NA.
The bond stress calculation values for f_{bd} or the reduction factor for the bond stress calculation values k_b are specified in the European Technical Assessment/Approval (ETA), and must be multiplied by the bond stress calculation value as per DIN EN 1992-1-1 and DIN EN 1992-1-1/NA.

For rebar connections with fire resistance requirements, the bond stress calculation value under fire stress $f_{bd,fi}$ must be determined in accordance with the relevant ETA specifications.
Minimum anchor length $l_{b,min.}$ and minimum overlap length $l_{0,min.}$ as per DIN EN 1992-1-1 and DIN EN 1992-1-1/NA must be multiplied by the factor α_{lb} specified in the ETA.
If the specifications of the relevant ETA are observed, evidence of direct local force application in the concrete is deemed provided.

Extension of the loads to be anchored in the component must be demonstrated.

4. Execution

4.1 General

The rebar connections may only be executed by firms that meet the requirements of Section 5.

The rebar connections must be executed in line with the construction drawings and the installation instructions (drilling, cleaning, preparing the rebar, injecting adhesive mortar and setting rebar) of the relevant injection system manufacturer. Only the appliances provided for this purpose may be used for drilling, cleaning and injecting the mortar.

4.2 Execution documentation

An installation log must be drawn up for each rebar connection. The execution documentation is determined by Table 3. Installation logs must be readily available on the building site during the construction period. As for the delivery notes, they must be kept for at least 5 years by the companies after work is completed.

4.3 Execution monitoring

The proper preparation and execution of work must be monitored. To this end, the installation log must be checked and countersigned. In the event of deviations from the planning guidelines, the responsible planning engineer must be contacted.

Table 3 Installation log - Tests, Requirements and Frequency

Row	Subject of examination	Type of test	Requirements	Frequency, time
	Preparation			
1	Mortar container	Packaging instructions	Expiry date not yet passed	Every delivery
		Visual inspection	no noticeable changes	ongoing
		Storage conditions	Manufacturer's instructions	For storage/outsourcing
2	Processing equipment	Functional inspection	Proper working order	On commissioning and daily
3	Work plan (compiled from the planning documents)	Manufacturing and processing instructions	Compliance with provisions	Before work starts
	Processing			
4	Weathering	Temperature (in anchor base)	Compliance with work plan and installation instructions	Before filling the drill hole
		Drill hole protected from water ingress	No water in drill hole	Before filling the drill hole
5	Drilling	Overlap, edge distances centre distances	Compliance with work plan and installation instructions No	Each drill hole

Draft

Row	Subject of examination	Type of test	Requirements	Frequency, time
			reinforcement strikes during boring operations in the case of strikes, involve planners	
6	Drill hole cleaning	Visual inspection and blow-out check	Dust-free; clean drill hole surface	Each drill hole before filling
7	Rebars	condition, marking, mobility in drill hole	only rust film, embedment depth marked, mobile	Each bar before filling the drill hole
8	Occupational safety	Personal safety equipment	Wear suitable protective clothing, protective gloves and goggles/face protection	During operations involving injection mortar
9	Filling	Mortar fill mark on mixer extension tube	In line with work plan and installation instructions	Each bar during setting
		without cavities	no bar resilience, no mortar spraying	
10	Bonded-in rebar connections	Embedment depth	Embedment mark at drill hole mouth	Each bar after setting
		Filling	Visibly leaking mortar at drill hole mouth	

5. Operating requirements

5.1 General

Those persons manufacturing the rebar connection must

1. have valid proof of suitability as per Section 6,
2. have a qualified manager stated in the proof of suitability,
3. have a responsible site manager,
4. have site staff specifically trained for executing rebar connections who have certification of successful training attendance and
5. have the necessary instrumentation.

The firm must ensure that the site personnel have been trained in the manufacture of subsequent rebar connections with bonded-in rebars.

5.2 Qualified management

The qualified managers must have sufficient knowledge in reinforced concrete construction and experience in the manufacture of subsequent rebar connections with bonded-in rebars. They must have at least the qualifications necessary for reinforced concrete work independently and to manage operations in this field.
The qualified managers are competent and responsible for manufacturing rebar connections on the building site.

The tasks of qualified management include:

- assessing construction drawings in respect of the completeness of the information for subsequently bonded-in rebars
- drawing up and, where applicable, testing service descriptions and assessing the operability of the rebar connections.
- drawing up work plans (work instructions).
- assessing the expert qualifications of site personnel.
- evaluating the results of the installation log.

5.3 Responsible site manager

When manufacturing subsequent rebar connections with bonded-in rebars, a responsible site manager named in the proof of suitability must check on-site that the rebar connections with subsequent bonded-in rebars are manufactured in line with the provisions of this Directive.

He must ensure that the work is properly prepared and executed and must monitor the execution of the work. To this end, the installation log drawn up by the site personnel must be checked and countersigned.

Draft

The site manager must have technical knowledge of and skills and practical experience with concrete and other materials. The site manager must either have equivalent qualifications to the qualified managers or be trained to the same degree as the site personnel.

5.4 Site personnel

The work must be done by trained site personnel named in the proof of suitability and trained as per Section 7, must in particular be trained for manual work and must have the relevant skills and practical experience.

The tasks of skilled personnel include:

- the practical execution of drilling, cleaning, filling and fixing work according to the work plan. Any deviations must be documented in the installation log and the responsible site manager immediately informed.
- Keeping the installation log.

5.5 Instrumentation

For the manufacture of rebar connections with subsequent bonded-in rebars, the equipment and devices mentioned in the installation instructions must be present on the building site to enable expert execution of these works. All devices and equipment must be kept in good working order.

Devices and equipment include
- Devices for accurate drilling (drilling aids) drillings stands for diamond core drilling devices,
- Devices for cleaning the drill holes,
- Equipment for storing the injection mortar cleanly and at the right temperature,
- Functional discharge units and mixer extension tubes,
- Compressor for oil-free compressed air of at least 6 bars.

6. Proof of suitability

Proof of suitability (see Specimen Order on requirements pertaining to manufacturers of construction products - MHAVO) shall be issued by a recognised inspection body (see list of testing laboratories, inspection bodies and certification bodies - PÜZ-Verzeichnis Part IV).

If this inspection body has determined that the operating requirements under Section 5(2), (3) and (4) are met, it shall issue proof of suitability.

Proof of suitability is issued for a period of 3 years and is revocable. Upon request, the validity period of the proof of suitability may be extended by the inspection body for 3 years.

Before any extension, the inspection body must be provided with proof that the above-mentioned operating requirements have been met. Any change to the personnel named in the proof of suitability must be notified to the inspection body.

7. Training and testing of site personnel

7.1 General

Site personnel must be trained as set out below. After training, a recognised inspection body must check that the personnel has sufficient knowledge (see PÜZ Verzeichnis Part IV, item no. ...).

If this inspection body determines that training was successful, it shall issue a certificate to this effect.

7.2 Contents of training

- Safety measures (goggles, gloves, etc.)
- Ensuring that devices function (when is a device no longer working properly)
- Drilling methods (what methods are valid for the system and how they work, what characteristics, etc.)
- Using drilling aids (when and why they may be necessary, how to use)
- Cleaning methods (what methods are valid for the system and how they work, what characteristics, etc.)
- Special installation conditions (e.g. overhead, extreme temperatures)
- Work process (hierarchy and tasks of persons involved in planning and manufacturing; minimum work plan requirements; inspections to be carried out during and after the setting process; what to do in the event of reinforcement strikes, abortive drilling or missing information or incomplete work plan; requirements and inspections of additional equipment required; storage and protection of equipment and injection mortar; keeping the installation log; what to do if work is interrupted)

7.3 Contents of theoretical testing

Theoretical testing involves site personnel demonstrating in writing that there is sufficient knowledge of the training content for the system.

Draft

7.4 Contents of practical testing

Practical testing involves site personnel carrying out the following tasks:

- Executing complete overlapping joints near the edge ϕ = 12 mm, ℓ_v = 1.0 m in reinforced concrete according to the design drawings with installation log
  - Drilling holes with drilling aids
  - Cleaning drill holes according to the manufacturer's instructions (MPII)
  - Injecting using battery- or pneumatically-operated discharge units
  - Inserting the bar
  - Final check and self-assessment

- Bonding in a rebar ϕ = 12 mm in covered, transparent viewing tube where ℓ_v = 60 cm
  - The time required to inject the mortar and insert the bar must be measured.

Practical testing involves site personnel demonstrating that there is inter alia sufficient knowledge regarding the following issues:

- Was the work plan checked for completeness in terms of all necessary information?
- Before work begins, is there sufficient understanding of the work to be carried out?
- Do the devices used meet the approval requirements and are these devices safely controlled?
- Is the drill hole in the right place?
- For drilling near edges is the guidance device safely handled?
- Does the angular deviation during drilling meet the permissible tolerances?
- Is the drill hole cleaned in line with installation instructions?
- Are the rebar anchor lengths correctly marked and mobility in the drill hole controlled?
- Are film-wrapped packs checked for temperature and expiry date?
- Are film-wrapped packs correctly opened and prepared for changing the container?
- Are injection devices handled according to installation instructions? Is the fill mark correctly indicated on the mixer extension tube?
- Is the marked bar to hand before injection begins?
- Is the necessary volume of mortar discarded when a new container is opened?
- Does the mortar injection procedure meet the installation instructions for complete and cavity-free filling?
- Is the bar properly placed up to the anchor depth marking?
- Is the mortar leaking at the drill hole mouth?
- Is the permissible processing time complied with from the start of injection until the rebar is set?
- Were defects during or after rebar connection manufacture detected and properly corrected?
- Was the installation log completely and accurately kept?

Draft

Annex 1 – Scope of application

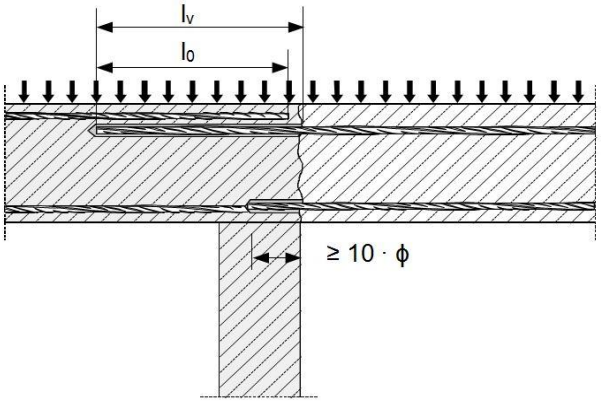

Figure 1: Overlapping joint with existing reinforcement of rebar connections of slabs and beams

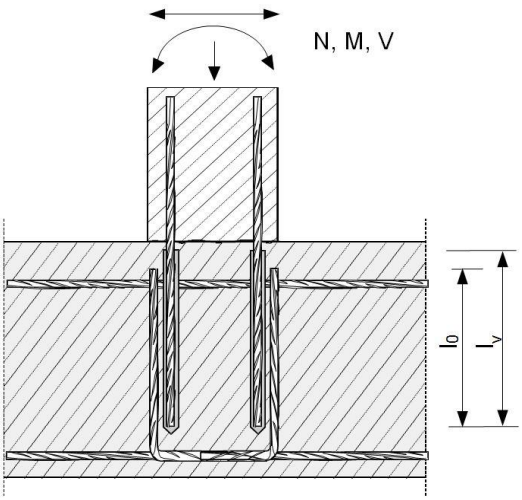

Figure 2: Overlapping joint with existing reinforcement of supports or walls subject to bending stress to a base. The rebars are subject to tensile stress.

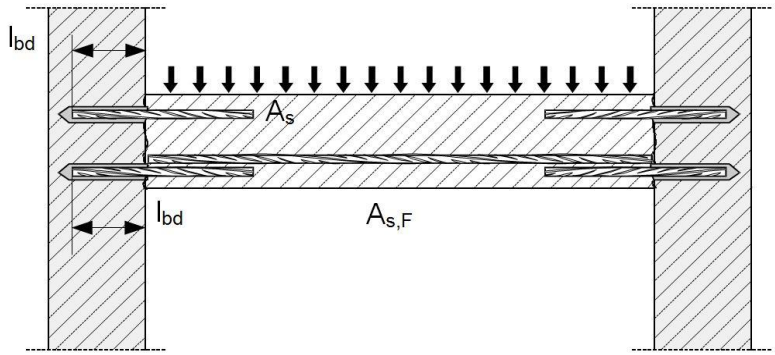

Figure 3: End anchorage of slabs or beams

Draft

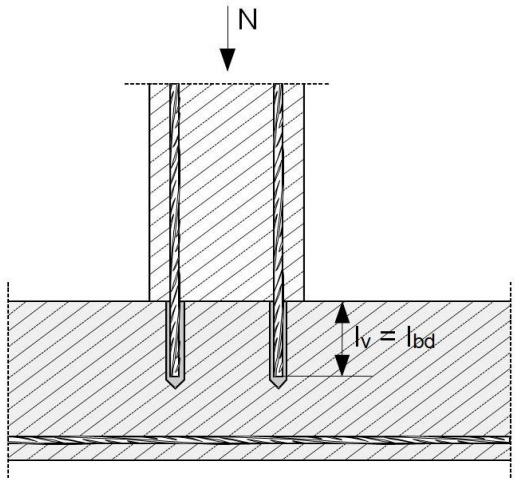

Figure 4: Rebar connections for building components predominantly subject to compressive loading

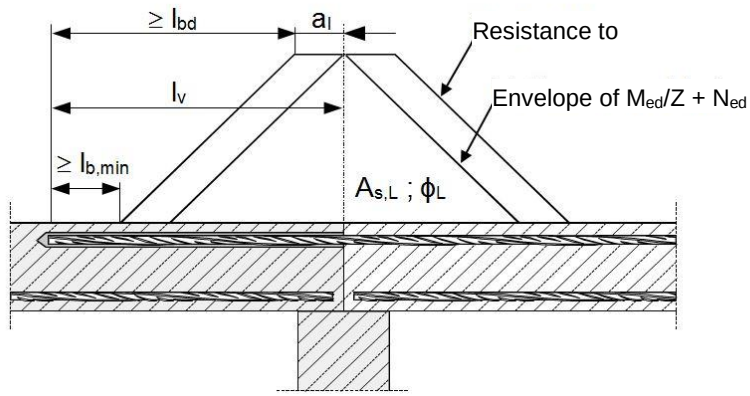

Figure 5: Anchoring of reinforcement to cover resistance to tension curve in construction parts subject to bending stress

Comments

- No transverse reinforcement is shown in Figure 1 to Figure 5. The transverse reinforcement under DIN EN 1992-1-1:2004+AC:2010 must be present.
- The transverse force transmission between existing and new concrete must be dimensioned according to DIN EN 1992-1-1:2004+AC:2010.

Draft

Annex 2 – General construction rules

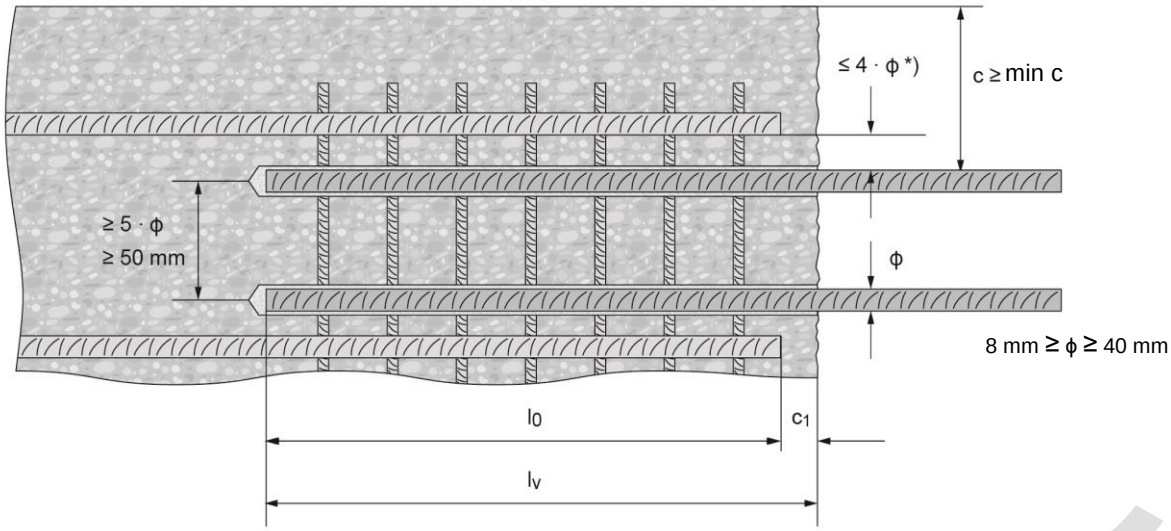

*) If the clear width of overlapping bars is more than 4 · ϕ, the overlap length must be increased by the difference between the existing clear bar spacing and 4 · ϕ.

c	Concrete surfacing for reinforcing steel set in concrete
c_1	Concrete surfacing on the front of the reinforcing steel set in concrete
min c	Minimum concrete surfacing pursuant to Table 1 and DIN EN 1992-1-1:2004+AC:2010, Section 4.4.1.2
ϕ	Diameter of reinforcing steel
l_0	Length of overlapping joint pursuant to DIN EN 1992-1-1:2004+AC:2010, Section 8.7.3
l_v	Embedment depth ≤ $l_0 + c_1$
d_0	Nominal drill hole diameter

Draft

Technical rule – Anchors in concrete

Anchors in concrete with encased or subsequently fitted fastenings

Planning, design and execution requirements

Version: 3 June 2016

---

1 Scope of application

These technical rules apply to anchors set in concrete with fastening that have a European Technical Assessment/Approval (ETA) according to the following technical specifications:

- EAD 330008-02-0601 "Anchor bars"
- EAD 330084-00-0601 "Anchor plates with head bolts"
- EAD 330232-00-0601 "Mechanical anchors for use in concrete"
- EAD 330499-00-0601 "Bonded anchors for use in concrete"
- EAD 330747-00-0601 "Anchors for use in concrete for anchoring redundant, non-load-bearing systems"
- ETAG 001 "Metal anchors for anchoring in concrete"
- ETAG 020 "Plastic anchors"

2 Planning

2.1 General

Anchors must be designed in line with engineering practice. Verifiable design drawings must be prepared taking into account the loads to be anchored.

The provisions of the relevant ETA must be observed. In particular these are:

- Difference in cracked or uncracked concrete
- Concrete strength class of anchor base
- minimum component thickness
- minimum centre and edge distances
- Limit values for ambient and component temperatures

2.2 Anchors for redundant, non-load-bearing (non-structural) systems

Redundant, non-load-bearing (non-structural) systems are defined as follows:

$n_1 \leq 4$; $n_2 \leq 1$ and $n_3 \geq 3.0$ kN or
$n_1 \leq 3$; $n_2 \leq 1$ and $n_3 \geq 2.0$ kN or
n_1 = number of attachment points
n2 = number of anchors per attachment point
n3 = design value of effects NSd (kN) for an attachment point

2.3 Anchors in structures in earthquake zones

For anchors in structures in earthquake zones in Germany, all the fastenings mentioned in Section 1 may be used. The earth anchors shall be designed in accordance with the design process given in Section 3 for static and quasi-static effects.

2.4 Anchors in nuclear power plants and other nuclear plants

For anchors in nuclear power plants and other nuclear plants, the provisions of DIBt Guideline "Anchor fastenings in nuclear power plants and other nuclear plants" must be observed.

3 Design

3.1 General

Anchors must be designed in line with engineering practice. Verifiable calculations must be made taking into account the loads to be anchored.

Depending on the type of fastening, the following design methods should be used for designing anchors:

- ETAG 001, Annex C or
- DIN SPEC 1021-4 or
- EOTA TR 029 or
- ETAG 020, Annex C

The aforementioned design methods may not be mixed.
The product characteristics required for the design (characteristic values of load-bearing capacity, centre and edge distances, installation parameters) must be taken from the relevant ETA.

Draft

If the specifications of the relevant ETA are observed, evidence of direct local force application in the concrete is deemed provided.
Extension of the loads to be anchored in the component must be demonstrated.

3.2 Anchors in nuclear power plants and other nuclear plants

When designing anchors in nuclear power plants and other nuclear plants, the provisions of DIBt Guideline "Anchor fastenings in nuclear power plants and other nuclear plants" must be observed.

3.3 Anchors with fire resistance requirements

When designing anchors with fire resistance requirements, the provisions of EOTA TR 020 must also be observed.

4 Execution

In respect of execution, the provisions of DIBt paper "Instructions on installing anchor bolts" must be observed.

Draft

Technical Rule – Anchors in masonry

Anchors in masonry with subsequently fitted fastenings
Planning, design and execution requirements
Version: 3 June 2016

---

1 Scope of application

These technical rules apply to anchors set in concrete with fastenings that have a European Technical Assessment/Approval (ETA) according to the following technical specifications:

- EAD 330076-00-0604 "Metal injection anchors for anchoring in masonry"
- ETAG 029 "Metal injection anchors for anchoring in masonry"
- ETAG 020 "Plastic anchors"

2 Planning

Anchors must be designed in line with engineering practice. Verifiable design drawings must be prepared taking into account the loads to be anchored.

The provisions of the relevant ETA must be observed. In particular these are:

- Differentiation between anchoring methods
- Strength class of anchor base
- minimum component thickness
- minimum centre and edge distances
- Limit values for ambient and component temperatures

3 Design

Anchors must be designed in line with engineering practice. Verifiable calculations must be made taking into account the loads to be anchored.

Depending on the type of fastening, the following design methods should be used for designing anchors:

- - ETAG 029, Annex C or
- - ETAG 020, Annex C

The aforementioned design methods may not be mixed.
The product characteristics required for the design (characteristic values of load-bearing capacity, centre and edge distances, installation parameters) must be taken from the relevant ETA.
If the specifications of the relevant ETA are observed, evidence of direct local force application in the masonry is deemed provided.
Extension of the loads to be anchored in the component must be demonstrated.

4 Execution

In respect of execution, the provisions of DIBt paper "Instructions on installing anchor bolts" must be observed.

Draft

Technical Rule – Building inspectorate requirements, classification in classes, use of construction products, use of designs[6]

1. Construction products for which there are only requirements concerning behaviour in the event of fire

1.1 General remarks

To demonstrate the fire behaviour of parts of physical structures under the Technical Building Regulations mentioned in C 2, or under proof of usability pursuant to § 17 MBO, fire resistance classes are allocated under DIN 4102-1 to the requirements of A 2.1.2 in Section 1.2.

To demonstrate the fire behaviour of parts of physical structures in which construction products are used in line with the harmonised technical specifications under Regulation (EU) No. 305/2011, fire behaviour classes are classified in accordance with DIN 13501-1 in line with the requirements of A 2.1.2 in Section 1.3.

1.2 Building inspectorate requirements for building materials and their building material classes under DIN 4102-1:1998-05

Table 1.2.1: Building inspectorate requirements for building material classes under DIN 4102-1 for all building materials (including floorings and linear pipe insulation materials)

Building inspectorate requirement under A 2.1.2	Building material class under DIN 4102-1 and other information
non-combustible	A 1 A 2
non-combustible and melting point > 1 000 °C	A 1 A 2 and information: Melting point at least 1 000 °C under DIN 4102-17:1990-12
low flammability	B 1 and limited smoke development (I ≥ 400 % x min. on testing according to DIN 4102-15: 1990-05)
low flammability and no flaming droplets or particles	B 1 and no flaming droplets or particles and limited smoke development (I ≥ 400 % x min. on testing according to DIN 4102-15: 1990-05)
low flammability and low smoke development	B1 and low smoke development (I ≥ 100% x min. on testing according to DIN 4102-15: 1990-05)
low flammability and no flaming droplets or particles and low smoke development	B1 and no flaming droplets or particles and low smoke development (I ≥ 100% x min. on testing according to DIN 4102-15: 1990-05)
normally flammable no flaming droplets or particles	B 2
normally flammable	B 2 (including flaming droplets or particles)

Note on Table 1:
The clarifications under A 2.1.2 on building inspectorate requirements for non-combustible and low-flammability construction products clarify that these construction products must not continue to glow or smoulder.

[6] § 85a(1)(3) MBO does not apply to provisions in this Technical Building Regulation insofar as it relates to classifications associated with building inspectorate requirements; this also applies to sections of the application and execution conditions to be met as minimum conditions for classification.

For low-flammability and normally flammable construction products – excluding floorings – testing under DIN 4102-1 determines results on falling/dripping burning sample parts, for low-flammability construction products excluding smoke development values. Where flaming droplets or particles occur or where the limit value for smoke development is

exceeded for low-flammability construction products – excluding floorings – this must be specified in addition to the building material classification with the conformity mark.

1.3 Building inspectorate requirements for construction products and their classes under DIN EN 13501-1

Table 1.3.1 applies to the use of construction products, including components thereof, under harmonised European standards pursuant to the Official Journal of the European Union C 209/03 of 10 June 2016 and European Technical Assessments or European Technical Approvals pursuant to the Official Journal of the European Union C 172/4 of 13 May 2016.

Table 1.3.1 Building inspectorate requirement and allocation of classes under DIN EN 13501-1:2010-01

Building inspectorate requirements clarified by A 2.1.2	At least suitable classes under DIN 13501-1 and other information		
	Construction products excluding linear pipe insulation materials and floorings	linear pipe insulation materials	Floor coverings
non-combustible	▪ A2 – s1,d0 and information* on glow and smouldering behaviour	▪ $A2_L$ – s1, d0 and information* on glow and smouldering behaviour	▪ $A2_{fl}$ – s1
non-combustible and melting point > 1 000 °C	▪ A2 – s1,d0 and information* on glow and smouldering behaviour and on melting point**	▪ A2L – s1,d0 and information* on glow and smouldering behaviour and on melting point**	-
low-flammability and no flaming droplets or particles and low smoke development,	▪ C – s1,d0 and information* on glow and smouldering behaviour	▪ C_L – s1,d0 and information* on glow and smouldering behaviour	-
low-flammability and no flaming droplets or particles	▪ C – s3,d0 and information* on glow and smouldering behaviour	▪ C_L – s3,d0 and information* on glow and smouldering behaviour	-
low-flammability and low smoke development	▪ C – s1,d2 and information* on glow and smouldering behaviour	▪ C_L – s1,d2 and information* on glow and smouldering behaviour	▪ C_{fl} – s1
low flammability	▪ C – s3,d2 and information* on glow and smouldering behaviour	▪ C_L – s3,d2 and information* on glow and smouldering behaviour	▪ C_{fl} – s1
normally flammable and no flaming droplets or particles	▪ E	▪ E_L	-
normally flammable	▪ E-d2	▪ E_L –d2	▪ Efl

Note on Table 1.3.1:

The clarifications under A 2.1.2 on building inspectorate requirements for non-combustible and low-flammability construction products clarify that these construction products must not continue to glow or smoulder. Therefore, to assess usability, information on glow and smouldering behaviour must be used.

* glow and smouldering processes may occur with the following construction products pursuant to harmonised construction product standards EN 438-7, EN 13162, EN 13168, EN 13170, EN 13171, EN 14064-1, EN 14303, EN 13950, EN 13964, EN 13986, EN 14190 and EN 15498. The EU Commission has changed Mandate M/0367 with the result that the essential characteristic "glow/smouldering" must be anchored in the above-mentioned product standards (European Commission AG003/4/1). Information on this is required.

** The information is required for insulating materials of mineral wool.

Explanatory notes re Table 1.3.1

Derivation of abbreviations	Criterion	Scope of Application
s (Smoke)	Smoke development	Smoke development requirements, – s1; low smoke development, – s2, s3: limited smoke development

d (Droplets)	flaming droplets/particles	Requirements for flaming droplets/particles, – d0; no flaming droplets/particles, – d1, d2; flaming droplets/particles
....fl (Floorings)		Fire behaviour classes for floorings
…L (Linear Pipe Thermal Insulation Products)		Fire behaviour classes for products used to provide thermal insulation for linear pipes

Under EU provisions, construction products may be classified in respect of fire behaviour without further testing (decisions, delegated acts).
Source: http://eur-lex.europa.eu, www.dibt.de -> Business areas -> The DIBt in Europe->Fire prevention commission

2. Electrical cables and electrical cable systems

2.1 Electrical cables

To demonstrate the fire behaviour of electrical cables under the Technical Building Regulations or under the proof of usability pursuant to § 17 MBO, fire behaviour classes may be allocated under DIN 4102-1 to the requirements of A 2.1.2 of Table 2.1.1.

Table 2.1.1: Building inspectorate requirement and allocation of fire behaviour classes under DIN 4102-1:1998-05

Building inspectorate requirement clarified by A 2.1.2	Classes under DIN 4102-1 and other information
non-combustible	A1, A2
low flammability	B1 and limited smoke development (I ≥ 400 % x min. on testing according to DIN 4102-15)
low-flammability and low smoke development	B1 and low smoke development (I ≥ 100% x min. on testing according to DIN 4102-15)
normally flammable	B 2 (including flaming droplets or particles)

To demonstrate fire behaviour for electrical cables for which there are harmonised technical specifications under Regulation (EU) No. 305/2011 pursuant to the Official Journal of the European Union C 209/03 of 10 June 2016 and C 172/4 of 13 May 2016, fire behaviour classes may be allocated according to DIN 13501-6 in line with the requirements of A 2.1.2 of Table 2.1.2.

Table 2.1.2: Building inspectorate requirement and allocation of fire behaviour classes under DIN EN 13501-6:2014-07

Building inspectorate requirement clarified by A 2.1.2	At least suitable classes under DIN EN 13501-6 and other information
non-combustible	A_{ca}
low flammability	$B1_{ca}$ –s3/
low-flammability and low smoke development	$B1_{ca}$ -s1
normally flammable	E_{ca}

2.2 Electrical cable systems

To demonstrate the functional integrity of electrical cable systems under the proof of usability pursuant to § 16a MBO, functional integrity classes may be taken from DIN 4102-12 in line with the requirements of A 2.1.14 in conjunction with Technical Rule A 2.2.1.9, Table 2.2.1.

Table 2.2.1: Building inspectorate requirements and allocation of functional integrity classes under DIN 4102-12:1998-11

Functional integrity in minutes clarified by A 2.2.1.9	Functional integrity according to DIN 4102-12
≤ 30	E 30

≤ 60	E 60
≤ 90	E 90

3. Roof coverings

To demonstrate the roof covering property as part of the physical structure under fire stress from the outside against flying sparks and radiating heat (hard roof covering), roof coverings are classified as resistant to flying sparks and radiating heat under DIN 4102-7 in conjunction with DIN SPEC 4102-23:2011-10.

Table 3.1: Building inspectorate requirement and allocation of building component classes under DIN 4102-7:1987-03

Building inspectorate requirement	DIN 4102-7
Fire stress from outside due to flying sparks and radiating heat (hard roof covering)	Resistance of roof coverings against flying sparks and radiating heat

To demonstrate the fire behaviour of a hard roof covering while using construction products (DIN EN 494, DIN EN 534, DIN EN 13707, DIN EN 13956, DIN EN 14351-1 and DIN EN 14963) under harmonised European standards or European Technical Assessments pursuant to the Official Journal of the European Union C 209/03 of 10 June 2016 and C 172/4 of 13 May 2016, Table 3.2 applies

Table 3.2: Building inspectorate requirement and allocation of building component classes under DIN EN 13501-5

Building inspectorate requirement	DIN EN 13501-5
Fire stress from outside due to flying sparks and radiating heat (hard roof covering)	B_{ROOF}(t1)*

* If under the CE marking of class B_{ROOF}(t1), stress caused by fire from outdoors pursuant to DIN EN13501-5 is indicated, this only applies to the roof covering if the execution of the roof corresponds to the executions in the related classification document, in delegated acts or in a decision of the European Commission in respect of fire behaviour. If this is not the case, a hard roof covering requires type approval.

4. Building components

4.1 Load-bearing components

To demonstrate the fire resistance of parts of load-bearing physical structures under the Technical Building Regulations mentioned in C 2, or under proof of usability pursuant to § 17 MBO, or for construction types pursuant to § 16a MBO fire resistance classes may be classified in accordance with the DIN 4102 series of standards in line with the requirements of A 2.1.3 in Section 4.2, Table 4.2.3.

To demonstrate the fire resistance of load-bearing parts of physical structures for components and construction products, the harmonised technical specifications under Regulation (EU) No. 305/2011 pursuant to the Official Journal of the European Union C 209/03 of 10 June 2016 and C 172/4 of 13 May 2016, fire behaviour classes may be allocated according to DIN EN 13501 in line with the requirements of A 2.1.3 of Section 4.3. For design according to Eurocode, Tables 4.1.1, 4.1.2 and 4.2.2 must be observed.

Draft

Table 4.1.1: Building inspectorate requirement on fire resistance for load-bearing part and design according to Eurocode

Building inspectorate requirement	Eurocode 1992-1999 mathematically determined value x using the standard temperature-time curve in minutes.	Application rule for mathematically quantified construction types using specific building materials
fire retardant	≤ 30 and < 60	DIN 4102-4:2016-05
fire retardant and of incombustible materials	≤ 30 and < 60, not determinable for Eurocode 1995 (building material)	DIN 4102-4:2016-05
highly fire-retardant (combustible load-bearing parts with a fire-retardant covering)	≤ 60 and < 90	not available (consequence: type approval)
highly fire retardant and of incombustible materials in the main parts highly fire retardant and of incombustible materials	≤ 60 and < 90	DIN 4102-4:2016-05
fire-resistant (non-combustible load-bearing and stiffening parts) fire-resistant and of incombustible materials	≤ 90	DIN 4102-4:2016-05
fire wall (fire-resistant and of incombustible materials) highly fire-retardant and of non-combustible building materials and stable even under additional mechanical stress (walls instead of fire walls)	not determinable	-
Outer walls of buildings which, from the inside out, always have the fire resistivity of the load-bearing and supporting parts of the building (however, the building components must be at least fire-retardant), and, from the outside in, have the fire resistivity of the fireproof building components.	not determinable (but permissible if determined ≤ 90)	-
Fire resistance 120 mins	≤ 120	-

Draft

Table 4.1.2: Building inspectorate requirement and classification of class specifications pursuant to Eurocode DIN EN 1992-1-2, DIN EN 1994-1-2, DIN EN 1996-1-2/NA

Building inspectorate requirement	Classes under Eurocode:	Specifications and application rules using specific building materials
fire retardant	R30	DIN EN 1992-1-2, Section 5 DIN EN 02/01/1994, Section 4 DIN EN 1996-1-2/NA, re Annex B DIN 4102-4:2016-05 also applies
fire retardant and of incombustible materials	R30	DIN EN 1992-1-2, Section 5 DIN EN 1994-1-2, Section 4 DIN EN 1996-1-2/NA, re Annex B DIN 4102-4:2016-05 also applies
highly fire-retardant (combustible load-bearing parts with a fire-retardant covering)	-	-
highly fire retardant and of incombustible materials in the main parts highly fire retardant and of incombustible materials	R60	DIN EN 1992-1-2, Section 5 DIN EN 02/01/1994, Section 4 DIN EN 1996-1-2/NA, re Annex B DIN 4102-4:2016-05 also applies
fire-resistant (non-combustible load-bearing and stiffening parts) fire-resistant and of incombustible materials	R90	DIN EN 1992-1-2, Section 5 DIN EN 1994-1-2, Section 4 DIN EN 1996-1-2/NA, re Annex B DIN 4102-4:2016-05 also applies
Fire resistance 120 mins	R120	DIN EN 1992-1-2, Section 5 DIN EN 1994-1-2, Section 4 DIN EN 1996-1-2/NA, re Annex B DIN 4102-4:2016-05 also applies

Draft

4.2 Space-enclosing components

Table 4.2.1: Building inspectorate requirement regarding the fire resistance of space-enclosing walls and classification of class specifications pursuant to Eurocode

Building inspectorate requirement	Classes under Eurocode:	Specifications and application rules using specific building materials
fire retardant	EI30	DIN EN 1992-1-2, Section 5 DIN EN 1996-1-2/NA, re Annex B DIN 4102-4:2016-05 also applies
fire retardant and of incombustible materials	EI30	DIN EN 1992-1-2, Section 5 DIN EN 1996-1-2/NA, re Annex B DIN 4102-4:2016-05 also applies
highly fire-retardant (combustible load-bearing parts with a fire-retardant covering)	-	-
highly fire retardant and of incombustible materials in the main parts highly fire retardant and of incombustible materials	EI60	DIN EN 1992-1-2, Section 5 DIN EN 1996-1-2/NA, re Annex B DIN 4102-4:2016-05 also applies
fire-resistant (non-combustible load-bearing and stiffening parts) fire-resistant and of incombustible materials	EI90	DIN EN 1992-1-2, Section 5 DIN EN 1996-1-2/NA, re Annex B DIN 4102-4:2016-05 also applies
Fire resistance 120 mins	EI120	DIN EN 1992-1-2, Section 5 DIN EN 1996-1-2/NA, re Annex B DIN 4102-4:2016-05 also applies

Draft

Table 4.2.2: Building inspectorate requirement regarding the fire resistance of supporting and space-enclosing ceilings and classification of class specifications pursuant to Eurocode

Building inspectorate requirement	Classes under Eurocode:	Specifications and application rules using specific building materials
fire retardant	REI30	DIN EN 1992-1-2, Section 5 DIN 4102-4:2016-05 also applies
fire retardant and of incombustible materials	REI30	DIN EN 1992-1-2, Section 5 DIN 4102-4:2016-05 also applies
highly fire-retardant (combustible load-bearing parts with a fire-retardant covering)	-	-
highly fire retardant and of incombustible materials in the main parts highly fire retardant and of incombustible materials	REI60	DIN EN 1992-1-2, Section 5 DIN 4102-4:2016-05 also applies
fire-resistant (non-combustible load-bearing and stiffening parts) fire-resistant and of incombustible materials	REI90	DIN EN 1992-1-2, Section 5 DIN 4102-4:2016-05 also applies
Fire resistance 120 mins	REI120	DIN EN 1992-1-2, Section 5 DIN 4102-4:2016-05 also applies

Draft

Table 4.2.3: Building inspectorate requirement and classification of fire resistance classes under DIN 4102-2, -3 for load-bearing components, internal walls, external walls, stand-alone false ceilings, roofs, stairs, double floors, fire walls

Building inspectorate requirements	Classes under DIN 4102-2	Abbreviation under DIN 4102-2
fire retardant	Fire resistance class F 30	F 30 - B[1]
fire retardant and of incombustible materials	Fire resistance class F 30 and of incombustible materials	F 30 - A[1]
highly fire retardant	-	--
highly fire-retardant (non-combustible load-bearing and stiffening components)	Fire resistance class F 60 and of incombustible materials in the main parts	F 60 - AB[2,3]
highly fire retardant and of incombustible materials	Fire resistance class F 60 and of incombustible materials	F 60 - A[2,3]
fire-resistant (non-combustible load-bearing and stiffening parts)	Fire resistance class F 90 and of incombustible materials in the main parts	F 90 - AB[4,5]
fire-resistant and of incombustible materials	Fire resistance class F 90 and of incombustible materials	F 90 - A[4,5]
fire wall (fire-resistant and of incombustible materials)	Fire wall	--
highly fire-retardant and of non-combustible building materials and stable even under additional mechanical stress (walls instead of fire walls)	highly fire-retardant wall instead of a fire wall and of non-combustible building materials and stable even under additional mechanical stress (walls instead of fire walls)	--
Outer walls which, from the inside out, always have the fire resistivity of the load-bearing and supporting parts of the building (however, the building components must be at least fire-retardant), and, from the outside in, have the fire resistivity of the fireproof building components.	Outer walls which, from the inside out, always have the fire resistivity of the load-bearing and supporting parts of the building (however, the building components must be at least fire-retardant), and, from the outside in, have the fire resistivity of the fireproof building components.	F30-B / F90-AB

[1] W 30 also permissible for non-load-bearing external walls
[2] Evidence and classification as per Table 4.3.1.
[3] W 60 also permissible for non-load-bearing external walls
[4] W 90 also permissible for non-load-bearing external walls
[5] Load-bearing components must be tested under DIN 4102-2:1977-09, Section 6.2.2.6. under appropriate load.

Draft

4.3 Use of construction products and construction kits under harmonised technical specifications for load-bearing and space-enclosing components

Note:
European classification of fire resistance does not take into account the fire behaviour of parts of the physical structure.

Table 4.3.1: Building inspectorate requirements regarding fire resistance including fire behaviour; information on the performances of construction products and construction kits under harmonised technical specifications, classification as per DIN EN 13501-2: 2010-02

Building inspectorate requirement	Load-bearing components		
	without space barrier1	with space barrier	fire behaviour, at least suitable classes as per DIN EN 13501-1:2010-01
fire retardant	R 30	REI 30	▪ E – d2
fire retardant and of incombustible materials	R 30	REI 30	▪ A2 – s1,d0 and information on glow and smouldering behaviour
highly fire-retardant (load-bearing and stiffening parts made of combustible building materials)	R 60-$K_2$60	REI 60-$K_2$60	▪ E
highly fire retardant and of incombustible materials in the main parts	R 60	REI 60[2]	▪ A2 – s1,d0 and information on glow and smouldering behaviour
highly fire-retardant and of non-combustible building materials and stable even under additional mechanical stress (walls instead of fire walls)	--	REI 60-M	▪ A2 – s1,d0 and information on glow and smouldering behaviour
fire-resistant (non-combustible load-bearing and stiffening parts)	R 90	REI 90[2]	▪ A2 – s1,d0 and information on glow and smouldering behaviour, also E
fire-resistant and of incombustible materials	R 90	REI 90	▪ A2 – s1,d0 and information on glow and smouldering behaviour
fire resistance 120 minutes and of incombustible materials	R 120	REI 120	▪ A2 – s1,d0 and information on glow and smouldering behaviour
Fire wall	--	REI 90-M	▪ A2 – s1,d0 and information on glow and smouldering behaviour

[1] For steel parts coated with reactive fire protection systems, the information IncSlow under DIN EN 13501-2 must also be mentioned in the declaration of performance.
[2] A layer of non-combustible coating running through the components: A2 – s1,d0 and information on glow and smouldering behaviour

Draft

Table 4.3.2: Building inspectorate requirements regarding fire resistance including fire behaviour; information on the (required) performances of construction products and construction kits under harmonised technical specifications, classification as per DIN EN 13501-2: 2010-02

Building inspectorate requirement	Non-load-bearing internal walls and their fire behaviour	
	with space barrier	fire behaviour, at least suitable classes as per DIN EN 13501-1
fire retardant	EI 30	▪ E – d2
fire retardant and of incombustible materials	EI 30	▪ A2 – s1,d0 and information on glow and smouldering behaviour
highly fire-retardant (combustible load-bearing and stiffening parts)[3]	EI 60-$K_2$60	▪ Insulating materials and fire-retardant covering: A2 – s1,d0 and information on glow and smouldering behaviour ▪ In all other respects: E
highly fire-retardant and of incombustible materials in the main parts (non-combustible load-bearing and stiffening parts)[2,3]	EI 60	▪ Main parts: A2 – s1,d0 and information on glow and smouldering behaviour ▪ In all other respects: E
highly fire-retardant and of non-combustible building materials and stable even under additional mechanical stress (walls instead of fire walls)3	EI 60-M	▪ A2 – s1,d0 and information on glow and smouldering behaviour
fire-resistant (non-combustible load-bearing and stiffening parts)[2.3]	EI 90	▪ A2 – s1,d0 and information on glow and smouldering behaviour, also E
fire-resistant and of incombustible materials	EI 90	▪ A2 – s1,d0 and information on glow and smouldering behaviour
fire resistance 120 minutes and of incombustible materials	EI 120	▪ A2 – s1,d0 and information on glow and smouldering behaviour
Fire wall	EI 90-M	▪ A2 – s1,d0 and information on glow and smouldering behaviour

[2] A layer of non-combustible coating running through the components: A2 – s1,d0 and information on glow and smouldering behaviour
[3] Parts within the component to ensure stability (dead weight) and usability

Draft

Table 4.3.3: Building inspectorate requirements regarding fire resistance including fire behaviour; information on the (*required)* performances of construction products and construction kits under harmonised technical specifications, classification as per DIN EN 13501-2: 2010-02

Building inspectorate requirement	Non-load-bearing external walls	
	with space barrier	fire behaviour, at least suitable classes as per DIN EN 13501-1:2010-02
fire retardant	E 30 (i→o) and EI 30-ef (i←o)	▪ E – d2
fire retardant and of incombustible materials	EI 30	▪ A2 – s1,d0 and information on glow and smouldering behaviour
highly fire-retardant (combustible load-bearing and stiffening parts)[3]	E 60 (i→o) and EI 60-ef (i←o)	▪ Insulating materials and fire-retardant covering: A2 – s1,d0 and information on glow and smouldering behaviour ▪ In all other respects: E
highly fire-retardant and of incombustible materials in the main parts (non-combustible load-bearing and stiffening parts)[2,3]	E 60 (i→o) and EI 60-ef (i←o)	▪ Main parts: A2 – s1,d0 and information on glow and smouldering behaviour ▪ In all other respects: E
highly fire-retardant and of non-combustible building materials and stable even under additional mechanical stress (walls instead of fire walls)	EI 60-M	▪ A2 – s1,d0 and information on glow and smouldering behaviour
fire-resistant (non-combustible load-bearing and stiffening parts)[2.3]	E 90 (i→o) and EI 90-ef (i←o)	▪ A2 – s1,d0 and information on glow and smouldering behaviour, also E
fire-resistant and of incombustible materials	EI 90	▪ A2 – s1,d0 and information on glow and smouldering behaviour
fire resistance 120 minutes and of incombustible materials	EI 120	▪ A2 – s1,d0 and information on glow and smouldering behaviour
Fire wall	EI 90-M	▪ A2 – s1,d0 and information on glow and smouldering behaviour

[2] A layer of non-combustible coating running through the components: A2 – s1,d0 and information on glow and smouldering behaviour

[3] Parts within the component to ensure stability (dead weight) and usability

Draft

5 Barriers, locking mechanisms

5.1 Fire and/or smoke barriers

5.1.1 General

To demonstrate the fire resistance of physical structures using fire and smoke barriers under proof of usability pursuant to § 17 MBO, the allocation of fire resistance classes may be taken from the DIN 4102 series of standards in line with the requirements of A 2.1.6, A 2.1.7, A 2.1.8, A 2.1.12 and A 2.1.13 of Section 5.1.2.

To demonstrate the fire resistance of physical structures using fire and smoke barriers for which there are harmonised technical specifications under Regulation (EU) No. 305/2011 pursuant to the Official Journal of the European Union C 209/03 of 10 June 2016 and C 172/4 of 13 May 2016, fire behaviour classes may be classified as per DIN 13501 in line with the requirements of A 2.1.6, A 2.1.7, A 2.1.8, A 2.1.12 and A 2.1.13 of Section 5.1.3.

5.1.2 Fire and smoke barriers classified under DIN 4102-5:1977-05

Table 5.1.2.1: Building inspectorate requirements and classification of fire resistance classes under DIN 4102-5 for fire and smoke barriers excluding conveyor system closures

Building inspectorate requirements	Product	Abbreviation under DIN 4102-5	Tightly sealed[1]
fire retardant self-closing tightly sealed	Fire protection barrier	T 30	X
fire retardant self-closing smoke-proof	Fire protection barrier with smoke control property	T 30-RS	
highly fire retardant self-closing tightly sealed	Fire protection barrier	T 60	X
highly fire retardant self-closing smoke-proof	Fire protection barrier with smoke control property	T 60-RS	
fire-resistant self-closing tightly sealed	Fire protection barrier	T 90	X
fire-resistant self-closing smoke-proof	Fire protection barrier with smoke control property	T 90-RS	
Fire resistance 120 mins self-closing tightly sealed	Fire protection barrier	T 120	X
Fire resistance 120 mins self-closing smoke-proof	Fire protection barrier with smoke control property	T 120-RS	
smoke-proof self-closing	Smoke barrier	RS	

[1] Doors are tightly sealed if they have sturdy door panels and are fitted with three-sided, permanently elastic seals on both frames and doors due to their form (lip/hose seal) and the sealing manner. Door panels are sturdy if they are closed and show deformations ≥ 2 mm.

Draft

5.1.3 Fire and/or smoke barriers under DIN EN 16034 and application and execution conditions

Table 5.1.3.1: Classifications under DIN EN 13501-2:2010-02 for fire and smoke barriers under DIN EN 16034

Building inspectorate requirements	Fire barriers		Smoke barriers
	without smoke control property	with smoke control property	
fire retardant tightly sealed self-closing	EI_2 30-S_aC.. [1]		
highly fire retardant tightly sealed self-closing	EI_2 60-S_aC.. [1]		
fire-resistant tightly sealed self-closing	EI_2 90-S_aC.. [1]		
fire retardant smoke-proof self-closing	--	EI_2 30-S_{200}C.. [1]	
highly fire retardant smoke-proof self-closing		EI_2 60-S_{200}C.. [1]	
fire-resistant smoke-proof self-closing		EI_2 90-S_{200}C.. [1]	
smoke-proof and self-closing			S_{200}C 5
[1] Specifications on the number of test cycles for long-term performance tests: C5 (200 000 cycles) for fire/smoke protection doors (revolving barriers) C2 (10 000 cycles) for other fire/smoke protection barriers (e.g. flaps, gates)			

Section 1.3 applies to the fire behaviour of building product components.

The following building inspectorate application and execution conditions for fire and smoke barriers under DIN EN 16034 apply to the use of fire and smoke barriers and fire and smoke curtains used to ensure compliance with the structural requirements when using these products.

The start of the co-existence period pursuant to the publication of the above-mentioned product standard in the Official Journal of the European Union opens the way to the CE marking of fire and/or smoke barriers.

Application and execution conditions

A. General remarks

A.1 Installation, assembly and operating instructions

To install, assemble and operate fire and smoke barriers, detailed installation, assembly and maintenance instructions compiled by the manufacturer or their representative must be made available. The manufacturer or their representative must detail the information necessary for installing, commissioning and inspecting fire and smoke barriers.

In particular, the installation, assembly and operating instructions must contain at least the following information – in accordance with the classification report and the corresponding EXAP rules under DIN EN 15269:

- Type, execution and minimum thickness of walls in which the construction product may be installed in
- Type, execution and minimum thickness of components in which the construction product may be installed in
- Principles for installing the construction product and filling joints with information on the building materials to be used (e.g. mortar)
- Information frame forms, thicknesses and materials
- Instructions for assembly of any frames disassembled for transport reasons
- Information on the fire-resistant washers to be used
- Instructions for installing any fire-resistant washers delivered separately for transport reasons
- Information on shortening property and necessary framework conditions
- Information on installation at height

- Information on permissible anchors
- Instructions for the application of anchors or information on the use of permissible anchors when assembling with frame anchors (e.g. anchor base and minimum distance of anchors)
- Instructions on inserting seal and insulation profiles and intumescent building materials
- Information on permissible accessories (e.g. construction hinges, locks, closing devices, handles)
- Information on door closer/spring hinge settings
- Information on the use of locking mechanisms
- Information on the type of locking device potentially installed by the manufacturer
- Information on the functional interaction of all parts (e.g. information on gap dimensions)
- Information on the order of work processes

A.2 Servicing manual

The fire safety of fire and/or smoke barriers is only ensured over time if they are constantly kept in proper working order (e.g. servicing and maintenance, no mechanical damage, no soiling).

The manufacturer or their representative in German must make detailed maintenance instructions on fire and/or smoke barriers available. The manufacturer or their representative must detail the information necessary for servicing, maintenance and testing fire and/or smoke barriers. In particular they must show which work needs to be carried out to ensure that the fitted fire and/or smoke barriers continues to perform their function, even after frequent use (e.g. servicing of wearing parts and closing devices).

B. Planning and design

B.1 Adjoining walls and components

The fire and/or smoke barrier may only be installed in walls or attached to components that comply with the provisions of the installation instructions.

When installing the fire and/or smoke barrier, proof of stability and usability of adjoining walls and components remains unaffected and provided accordingly, e.g. pursuant to DIN 4103-1.

The fire and/or smoke barrier must be firmly secured to adjoining components so that the forces arising when the fire and/or smoke barrier closes automatically and the forces stemming from deformations in the event of fire are absorbed over time by the anchors. These forces must not endanger the stability of adjoining walls.

The safety of the physical structure is only ensured if the components adjoining the fire and/or smoke barrier are at least fire-retardant, highly fire-retardant or fire-resistant in line with the fire resistance of the fire and/or smoke barrier.

The camber/component over the fire and/or smoke barrier must be designed statically and in line with fire protection regulations so that the fire and/or smoke barrier does not receive any additional load (except for its own weight).

The floor around the fire protection curtains must be non-combustible to a width of ≤ 2.5 m.

If fire and/or smoke barriers are installed in fire-resistant walls, the simplifications in respect of installation pursuant to § 29(5) MBO (e.g. fire-resistant wall with fire-retardant, sealed and self-closing door) in principle apply only to the barrier. The specifications of § 35(6)(2) MBO remain unaffected.

B.2 Installation in escape and rescue routes

As sliding, lifting or roll barriers and fire protection curtains do not open in the escape direction, an escape door must be positioned in the immediate vicinity.

B.3 Installation in external walls

If the installation of fire and/or smoke barriers in external walls is required, the requirements for physical structures are only met if the performance characteristics under DIN EN 14351-1 are demonstrated for the fire and/or smoke barrier.

B.4 Installation at height

Fire and/or smoke barriers for installation above ground level (height above ground > 500 mm) are not covered by the standard.

B.5 Fire protection curtains

Assessment of a fire protection curtain in respect of

- the shock resistance to collapsing or falling rubble, components or objects,
- smoke tightness and
- behaviour with pressure ratios deviating from those set out in DIN EN 1634-1,

is at the discretion of the competent building inspectorate.

The unrolling of the fire protection curtain after the hold-open system is triggered as a result of gravity must be durably secured.

The functionality and effectiveness of the fire protection curtain may not be impaired by suspended ceiling constructions or other installations.

B.6 Sliding, lifting or roll barriers

So-called lateral and/or camber flaps in conjunction with fire and/or smoke barriers are not covered by the standard.

B.7 Locking mechanisms

The following applies regardless of the "releasability" regarding the barrier:

The fire and/or smoke barrier may be fitted with a suitable locking mechanism with demonstrated applicability, e.g. through general type approval.

Where the fire and/or smoke barrier is already fitted with a locking mechanism by the manufacturer, this mechanism must comply with the provisions on the proof of applicability, e.g. general type approval for the locking mechanism used.

B.8 Further requirements

Where requirements are imposed regarding heat and/or sound insulation and further requirements pertaining to usability and durability under building inspectorate provisions for physical structures that also include barriers for openings, this proof must be provided for the special case of fire and/or smoke barriers.

C Installation and construction

C.1 Certificate of compliance

The company which installed the fire and/or smoke barrier or barriers must issue a certificate of compliance for each building project certifying that the fire and/or smoke barrier or barriers was/were installed properly and in line with all the assembly and operating instructions in respect of all details provided by the manufacturer of the fire and/or smoke barriers. See www.dibt.de for a template for this certificate. This declaration must be issued to the property owner to forward onto the relevant building supervisory authorities, where required.

C.2 Closing area

The installer must affix visible instructions on both sides of sliding, lifting and rolling barriers and fire protection curtains to the effect that the closing area must be kept free at all times from any objects that could obstruct the closing of the barrier.

C.3 Fire protection curtains

Fire protection curtains may only be executed by companies trained and briefed by the manufacturers.

After assembling all components, the fire protection curtain must be checked to ensure it is in proper working order (complete opening and closing) by the installer/builder.

The locking mechanism verified for the fire protection curtain (e.g. type approval) must be subjected to acceptance testing to ensure the fire protection curtain works properly at the place of use by a monitoring body recognised by the building inspectorate to ensure it works properly in combination with the fire protection curtain.

C.4 Welding work

Welding on the suspension may only be carried out by approved welders[20].

D Use

D.1 Safety in use

Once initiated, the closing process for a fire and/or smoke barrier may only be interrupted for personal safety purposes. The closing process must continue automatically from each opening position after the closing area has been released. Further requirements, in particular accident and work protection, remain unaffected.

D.2 Scheduled opening of sliding, lifting and roll barriers and fire protection curtains

The operator must be informed by the manufacturer in writing that the barrier only meets the requirements when closed.

The protective effect of the barrier is only ensured over time if they are constantly kept in proper working order (e.g. servicing and maintenance, no mechanical damage, no soiling).

The barrier must be kept operational at all times. It must be tested for operational readiness at least once a month by the suitably qualified personnel appointed by the operator under its own responsibility. The results must be entered in a test log kept for this purpose.

Annual testing and maintenance to ensure the barrier is activating and working properly with the locking mechanism must be carried out by the manufacturer or a specialist firm. The results must be entered in the test log.

The manufacturer must notify the operator in writing of all requests regarding regular testing.
The test log must be kept by the operator and submitted to the competent building inspectorate on request.

Draft

D.3 Installation of warning systems

Sliding, lifting and roll barriers and fire protection curtains must be fitted with an acoustic warning system that announces closure.

There must be a manual emergency activation facility in addition to the automatic activation device.

5.2 Fire protection barriers in path-bound conveyor systems

5.2.1 General

To demonstrate the fire resistance of physical structures where fire protection barriers are used in path-bound conveyor systems under proof of usability pursuant to § 17 MBO, the allocation of fire resistance classes may be taken from the DIN 4102 series of standards in line with the requirements of A 2.1.7 and A 2.1.8 and Section 5.2.2.

To demonstrate the fire resistance of physical structures where fire protection barriers are used in path-bound conveyor systems for which there are harmonised technical specifications under Regulation (EU) No. 305/2011 pursuant to the Official Journal of the European Union C 209/03 of 10 June 2016 and C 172/4 of 13 May 2016, fire behaviour classes may be classified as per DIN EN 13501 in line with the requirements of A 2.1.7 and A 2.1.8 and Section 5.2.3.

5.2.2 Fire protection barriers in path-bound conveyor systems classified under DIN 4102-5: 1977-05

Table 5.2.2.1: Building inspectorate requirements and classifications under DIN 4102-5 for fire protection barriers in path-bound conveyor systems

Building inspectorate requirements	Fire barriers in conveyor systems
fire-resistant and self-closing	T 90

[20] DIN EN 287-1 Qualification test of welders - Fusion welding (currently valid edition)

5.2.3 Construction kits for fire protection barriers in path-bound conveyor systems under harmonised technical specifications, classified under DIN EN 13501-2, and application and execution conditions

Table 5.2.3.1: Building inspectorate requirements and classifications under DIN 13501-2: 2010-02 for fire protection barriers in path-bound conveyor systems

Building inspectorate requirements	Fire barriers in conveyor systems
fire-retardant and self-closing2	EI_2 30-C..[1]
highly fire-retardant and self-closing2	EI_2 60-C..[1]
fire-resistant and self-closing2	EI_2 90-C..[1]

[1] Specifications on the number of test cycles for long-term performance tests:
C5 (200 000 cycles) for fire protection barriers in path-bound conveyor systems as scheduled closed barriers
C2 (10 000 cycles) for fire protection barriers in path-bound conveyor systems as scheduled open barriers

[2] The property "self-closing" (self-closing resistance) under DIN EN 13501-2 must be underpinned as follows for fire protection barriers for conveyor systems with electromotive drive systems for opening and closing [due to the withdrawal of DIN EN 14600]:

Table 5.2.3.2: Electromotive opening aids for mechanically locking conveyor system barriers

Item no.	property	Requirement
1	Functional safety of self-closing function	Electromotive opening aids must not impede the closing process (even if the opening aid fails) – Risk analysis of the possibility that the closing process will be impeded by the electromotive opening aid by the manufacturer and risk analysis assessment by the inspection body – When using different drives of a type series for different barrier

		sizes, the highest performance level (at the largest barrier) must be tested. The results of this test may be transferred to drives with lower performance of the same type series (expert opinion of the inspection body).

Draft

Table 5.2.3.3: Electromotive drive systems for opening and closing conveyor system barriers

Item number	property	Requirement
1	Electrical safety	Compliance with 2014/35/EU via the following standards – EN 60335-1 – EN 60335-2-103
2	EMC	Compliance with 2004/108/EC via the following standards – EN 61000-6-2 – EN 61000-6-3 – EN 61000-3-2 – EN 61000-3-3
3	Functional safety – Compatibility of system parts	Compatibility of all devices belonging to the system – Comparison of operating conditions based on manufacturer's product data sheets – Sample testing of device combinations chosen by the inspection body
4	Functional safety – Safety level of entire system (see definitions)	Safety level of self-closing function is pl d under EN ISO 13849-1 (e.g. monitored redundancy with automatic testing at least every 24 hours)
5	Functional safety – Methods for restoring functionality after activation	Simple (but not automatic) restoration of functionality after activation (no special tools)
6	Functional safety – Closing force/closing torque	Information on closing force/closing torque
7	Functional safety – Supply voltage fluctuation	Functionality when supply voltage fluctuates by ±15 %
8	Functional safety, behaviour <u>without fire alarm</u> with – failure of the public power supply (> 2 s) a) type of activation by the second energy supply b) type of activation by the second energy supply c) Status of opening control device d) Time taken to initiate closing process and monitoring status of the closing area e) Behaviour when an obstacle is encountered Disruption of 2nd Energy supply a) Time until the disruption is identified and displayed	 a) automatic switching to battery operation (standby parallel operation), e.g. energy supply pursuant to EN 54-4 b) automatic switching to battery operation (standby parallel operation), e.g. energy supply pursuant to EN 54-4 c) opening control device switch ineffective d) Initiate closing process within 3 s taking into account closing area monitoring e) Interrupt closing process (go back option); then at least five more closing attempts within 120 s The energy balance must be designed so that – at the lowest operational battery charge level[2] and – after 8 hours of temperature stress at the lowest temperature for the intended scope of application the drive system for the moving part[3] makes at least 5 closing attempts (complete opening and closing cycles[4]) within 30 mins in the event of a fire alarm. The battery end-point voltage must be reached in any operating state. When the lowest operational battery charging level is reached, a closing process for the moving part must be activated. Until the switch-off because end-point voltage is reached, all necessary components for the drive system must be operated within their supply parameters. a) 15 s

[2] corresponds to a value between operating voltage end-point voltage of batteries; to be determined with control manufacturer

[3] Execution with maximum weight and maximum run length

[4] The average closing speed value provided should be chosen as the door-closing speed

Item number	property	Requirement
	b) Methods and interval for testing the charging level for the 2nd Energy supply	b) Capacity testing every 24 hours
	– Disruption of drive system and monitoring of drive system	
	a) Time until the disruption is identified and displayed	a) 15 s
	b) Status of opening control device	b) opening control device switch ineffective
	c) Time taken to initiate closing process and monitoring status of the closing area after fault is identified	c) Initiate closing process within 3 s after fault is identified taking into account closing area monitoring
	d) Behaviour when an obstacle is encountered	d) Interrupt closing process (go back option); then make a closing attempt every 20 s
	– Disruption of closing area monitoring (where available)	
	a) Time until the fault is identified and displayed	a) 15 s
	b) Type of fault indicator	b) Optical (easily visible in ambient lighting of 500 lx) and acoustic near the barrier
	– long-term occupancy of closing area	optical and acoustic indicators near the barrier after a period determined by the competent building inspectorate in individual cases (i.e. depending on the goods conveyed)
9	Functional safety, behaviour when <u>a fire alarm is triggered</u> without closing area monitoring (forced closing after a specific time) when	
	– Alarm signal via fire alarms, activated fire alarm systems or by manual release button	
	a) Time until the disruption is identified	a) instantaneous
	b) Status of opening control device and optical smoke-sensitive safety equipment	b) switch ineffective
	c) Status of lock release where available	c) Door opener blocked as per the open circuit principle
	d) Time taken to initiate closing process after alarm detection	d) Initiate closing process within the specified forced closing time
	e) Behaviour when an obstacle is encountered	e) Interrupt closing process (go back option); then make a closing attempt every 20 s
	– additional failure of the public power supply (> 2 s) after fire alarm	
	a) type of activation by the second energy supply	a) automatic switching to battery operation (standby parallel operation)
	b) Behaviour when an obstacle is encountered	b) Interrupt closing process (go back option); then at least five more closing attempts within 120 s
10	Functional safety, behaviour <u>with fire alarm</u> with closing area monitoring with	
	– Alarm signal via fire alarms, activated fire alarm systems or by manual release button	
	a) Time until the disruption is identified	a) instantaneous
	b) Status of opening control device and optical smoke-sensitive safety equipment	b) switch ineffective
	c) Status of lock release where available	c) Door opener blocked as per the open circuit principle
	d) Time taken to initiate closing process and monitoring status of the closing area after alarm detection and monitoring status of the closing area	d) Initiate closing process only if closing area monitoring opens the closing area
	e) Behaviour when an obstacle is encountered	e) Interrupt closing process (go back option); then make a closing attempt every 20 s
	– additional failure of the public power supply (> 2 s) after fire alarm	
	a) type of activation by the second energy	a) automatic switching to battery operation (standby parallel

Draft

Item number	property	Requirement
	supply b) Behaviour when an obstacle is encountered	operation) b) Interrupt closing process (go back option); then at least five more closing attempts within 120 s
11	Fire detection	– Smoke alarm as per EN 54-7 – Heat detector as per EN 54 Part 5 (alarm class A1, A1R or A1S; when using heat detectors with higher alarm classes, measures must be taken to provide thermal protection of the drive system) – Smoke extraction systems as per EN 54-20 – Fire alarm with radio transmission as per EN 54-25
12	optical safety equipment for closing area monitoring	Requirements for optical sensors: These sensors must be insensitive to smoke if the supply parameters fluctuate so that they are not classified in test fires TF2 to TF5 during testing as per DIN EN 54-12 Evidence of smoke insensitivity: a) Determination of response level of optical sensors in line with DIN EN 54-12 (4 test items per sensor type) b) The optical sensors shall be installed at the height of the comparative gauges. The distance between transmitter and receiver or transmitter/receiver and reflector is 10 m during testing (shorter distances than 10 m may be agreed). c) Determination of fire sensitivity in line with DIN EN 54-12 at rated voltage; after functional testing (optical sensors triggered by opaque obstacle in the light path) the optical sensors (three each per sensor type for the four test items mentioned under (a)) until the end of the test fires TF2 to TF5 (m = 2 dB/m, or y = 6) <u>not</u> triggered. d) Sensitivity testing of optical sensors when supply parameters fluctuate in line with DIN EN 54-12 (three each per sensor type for the four test items mentioned under (a))

Section 1.3 applies to the fire behaviour of construction kit components.

Application and execution conditions:

1 General

The fire protection barrier in path-bound conveyor systems (hereafter conveyor system barriers) must be assembled and fitted at the place of use. The assembly and fitting of conveyor system barriers at the place of use is generally carried out by expert personnel of the manufacturer.

Otherwise, it should be noted that conveyor system barriers may only be assembled and fitted under this European technical approval guideline by companies that have sufficient experience in this field, that are trained and briefed by the approval/assessment holder and that can provide confirmation by the approval/assessment holder as proof of their expertise.

2 Declaration of conformity for the fitting of conveyor system barriers

The company that fitted the conveyor system barrier(s) must issue a certificate of conformity for each building project, certifying that the conveyor system barrier(s) fitted by said company meet the requirements of this European technical approval guideline and the relevant installation instructions (see www.dibt.de for a specimen of this certificate). This declaration must be issued to the property owner to forward onto the relevant building supervisory authorities, where required.

3 Inspection of conveyor system barriers and conveyor systems in the closing area of the wall opening

Through suitable measures agreed with the locking mechanism manufacturer, care must be taken to ensure that when the fire alarm is triggered, the conveying process is interrupted and the goods located within the opening area of the completion leave this area. Where the locking mechanism on the fire protection barrier is triggered by fire, smoke, a short circuit or power failure, the closing of the fire protection barrier must be delayed until the goods located within the opening area have passed through the wall opening - where applicable by means of an independent power supply (emergency power system) - or removed from the area by a stripping device that must be suited to the conveyed goods. The closing procedure must then start up independently and may not be interrupted.

4 Acceptance testing

After the installation of a conveyor system barrier at the place of use, a test must be carried out by an expert[21] to ensure that it works faultlessly with the locking mechanism and the conveyor system (acceptance testing).
The company that fitted the conveyor system barrier (installer) and the operator of the conveyor system must be notified of the acceptance testing by the manufacturer of the conveyor system barrier.

Draft

The acceptance testing must be arranged by the company that fitted the conveyor system barrier (installer). Afterwards, the company that fitted the conveyor system barrier (installer) must be notified by the manufacturer of the conveyor system barriers.

An acceptance report must be drawn up following the acceptance testing. Specifications are to be kept with the operator and a duplicate forwarded to the building supervisory authorities.

5 Servicing

Servicing manual
The manufacturer must deliver a servicing manual with each conveyor system barrier. The servicing manual must show which work needs to be carried out to ensure that the fitted conveyor system barrier continues to perform its function, even after frequent use (e.g. information on servicing replacement parts and closing devices).

5.1 Monthly inspection
The conveyor system barrier must be kept operational at all times. It must be tested for operational readiness at least once a month by the operator under its own responsibility. This monthly test must be performed by a qualified technician or a specially trained person. The results must be recorded in an inspection log. The manufacturer of the conveyor system barrier must notify this requirement to the conveyor's operator in writing.

5.2 Annual testing and servicing
The operator is further required, once a year, to check that the conveyor system barrier is working properly with the conveyor system and locking mechanism and must also carry out a service or have one carried out. This annual test and servicing must be performed by a qualified technician or specially trained person. The results must be recorded in an inspection log. The manufacturer of the conveyor system barrier must notify this requirement to the conveyor's operator in writing.

5.3 Landing doors
Landing doors for lifts in lift shafts with walls with fire resistance class F 90 under the technical rules pursuant to TVV TB Part C item numbers C 2.2.2 to C 2.2.4 meet the requirements for fire-resistant barriers in lift shaft walls.

Lift shaft barriers classified as "E 30/60/90" under DIN EN 81-58 for the installation in fire-retardant, highly fire-retardant or fire-resistant lift shaft walls meet the requirements for space barriers, heat transfer (under fire exposure) will not be avoided; the requirements under A 2.1.13 must therefore be observed.

Section 1.3 applies to the fire behaviour of landing doors.

5.4 Locking mechanisms
Technical Rule A 2.2.1.8

5.5 Tightly sealed internal walls
Doors are tightly sealed if they have sturdy door panels and are fitted with three-sided, permanently elastic seals on both frames and doors due to their form (lip/hose seal) and the sealing manner.

Door panels are sturdy if they are closed and show deformations ≥ 2 mm.

[21] The following are considered experts:
- VdS Schadensverhütung GmbH, Amsterdamer Straße 174, 50735 Cologne
- Jörg Richtermeier, Am Holderbrunnen 1, 74372 Sersheim
- Dietmar Schleicher, Banslebenring 25, 38170 Kneitlingen

6. Cable and pipe bulkheads

6.1 General
To demonstrate the fire resistance of parts of physical structures containing cable and pipe bulkheads used with construction types with proof of usability as per § 16a MBO

fire resistance classes may be classified under the DIN 4102 series of standards in line with the requirements of A 2.1.14, Section 6.2.

To demonstrate the fire resistance of physical structures containing cable and pipe bulkheads used with construction products or construction kits under harmonised technical specifications as per Regulation (EU) No. 305/2011 pursuant to the Official Journal of the European Union C 209/03 of 10 June 2016 and C 172/4 of 13 May 2016, fire resistance classes may be allocated under DIN 13501 to the requirements of A 2.1.14, Section 6.3.

The application rules of Section 6.3 apply to the use of construction products or construction kits for which there are harmonised technical specifications under Regulation (EU) No. 305/2011.

6.2 Cable and pipe bulkheads classified under DIN 4102-9:1990-05 or DIN 4102-11:1985-12

Table 6.2.1 Building inspectorate requirement and allocation of fire resistance classes under DIN 4102-9 or DIN 4102-11

Building inspectorate requirement	Fire resistance class	
	Cable seal (DIN 4102-9)	Pipe seal (DIN 4102-11)
fire retardant	S30	R30
highly fire retardant	S60	R60
fire-resistant	S90	R90
Fire resistance 120 mins	S120	R120

Evidence of the fire resistance of the insulation in the physical structure must be provided by type approval.

6.3 Cable and pipe bulkheads under harmonised technical specifications
6.3.1 Building inspectorate requirements and classifications

Table 6.3.1 Building inspectorate requirement and allocation of classifications under DIN 13501-2: 2010-02

Building inspectorate requirement	Fire resistance class		fire behaviour, at least suitable classes as per DIN EN 13501-1:2010-01
	Cable seal	Pipe seal	
fire retardant	EI 30	EI 30-U/U[1] EI 30-C/U[2]	E
highly fire retardant	EI 60	EI 60-U/ U[1] EI 60-C/ U[2]	
fire-resistant	EI 90	EI 90-U/ U[1] EI 90-C/ U[2]	
Fire resistance 120 mins	EI 120	EI 120-U/ U[1] EI 120-C/ U[2]	

[1] For the partitioning of combustible pipes or pipes with melting point < 1 000°C; for drinking water, heating and refrigeration pipes with diameters ≥ 110 mm, class EI ...-U/C is permissible.

[2] For the partitioning of non-combustible pipes with melting point ≤ 1 000°C, execution of pipes without connections to combustible pipes.

Section 1.3 applies to the fire behaviour of construction product components

6.3.2 Application and execution conditions

Table 6.3.2 Construction products or construction kits under harmonised technical specifications pursuant to Regulation (EU) No. 305/2011

6.3.2.1	Fire protection products or fire protection kits for sealing and closing cracks and openings and to stop the propagation of flames in the event of fire - bulkheads	Application and execution provisions 6.3.2.1/1
6.3.2.2	Products that foam in the event of fire for fire-sealing and fire-retardant uses	Application and execution provisions 6.3.2.2/1

Application and execution provisions 6.3.2.1/1
There is no final technical rule on the use of a construction product or construction kit with ETA as per **ETAG 026-1 and -2[22] / EAD No.**… for bulkheads in fire-resistant components.

The following applies to the use of a construction product or construction kit with ETA under **ETAG 026-1 and -2**[1]:

All partitions shall be permanently marked with a panel that must contain the following information:

Draft

- Cable, pipe or combination seal (as applicable) "..." of fire resistance class EI...under ETA No.: ...
- Name of the manufacturer of the partition (processor)
- Year of production: ...

The panel shall be fixed adjacent to the partition on the component.

The processor conducting the partitioning or changed to the partitioning (reassignment), shall issue a declaration of conformity for each project, certifying that the partitioning produced conforms to the provisions of the ETA (see www.dibt.de for a template for this declaration). This declaration must be issued to the property owner to forward onto the relevant building supervisory authorities, where required. For each version of the partitioning, the processor must inform the employer in writing that fire safety with the partitioning is only assured in the long term if the partitioning is always properly maintained and the proper state of isolation is restored after possible allocation changes.

Combined bulkheads may only be executed by companies that are trained and briefed by the marketing authorisation holder and who can provide a certification from the marketing authorisation holder as proof of their professional expertise.

[22] Applies to European technical approvals issued after 01 July 2013.

Application and execution provisions 6.3.2.2/1
For the use of a construction product or construction kit with ETA as per EAD 13-350005-00-1104 for bulkheads in fire-resistant components, except

- according to purpose IU 1 (EAD, Section 1.2.1):
  Installation situations that correspond to the applications under A 2.2.1.9 or the applications as per the respective fire resistance certificate under EAD footnote 1,
- according to purpose IU 2 to IU 5 (EAD, Section 1.2.1):
  Installation situations corresponding to assessment level 1 or 2 (EAD, Section 2.2.2.1),

there is no final technical rule.

The following applies to seals using the above-mentioned products according to purpose IU1 and IU2 to IU5:

All partitions shall be permanently marked with a panel that must contain the following information:

- Cable, pipe or combination seal (as applicable) "..." of fire resistance class EI...under ETA No.: ...
- Name of the manufacturer of the partition (processor)
- Year of production: ...

The panel shall be fixed adjacent to the partition on the component.

The processor conducting the partitioning or changed to the partitioning (reassignment), shall issue a declaration of conformity for each project, certifying that the partitioning produced conforms to the provisions of the ETA (see www.dibt.de for a template for this declaration). This declaration must be issued to the property owner to forward onto the relevant building supervisory authorities, where required. For each version of the partitioning, the processor must inform the employer in writing that fire safety with the partitioning is only assured in the long term if the partitioning is always properly maintained and the proper state of isolation is restored after possible allocation changes.

Combined bulkheads may only be executed by companies that are trained and briefed by the marketing authorisation holder and who can provide a certification from the marketing authorisation holder as proof of their professional expertise.

7. Ventilating machinery

7.1 General

To demonstrate the fire resistance of physical structures using construction products or components for ventilation systems with proof of usability pursuant to § 17 MBO, or for construction types pursuant to § 16a MBO, the allocation of fire resistance classes may be taken from the DIN 4102 series of standards or with proof of usability as per the requirements of A 2.1.15 in Sections 7.2 and 7.4.

To demonstrate the fire resistance of physical structures using construction products or components for ventilation systems for which there are harmonised technical specifications under Regulation (EU) No. 305/2011, the allocation of fire resistance classes may be taken from the DIN 13501 series of standards as per the requirements of A 2.1.15 in Sections 7.3 and 7.5.

The application rules of Sections 7.3 and 7.5 apply to the use of construction products or components for which there are harmonised technical specifications under Regulation (EU) No. 305/2011 pursuant to the Official Journal of the European Union C 209/03 of 10 June 2016 and C 172(4) of 13 May 2016.

7.2 Ventilation ducts classified under DIN 4102-6:1977-09 and DIN 4102-21:2002-08

Table 7.2.1: Building inspectorate requirement and allocation of fire resistance classes under DIN 4102-6 and DIN 4102-21

Building inspectorate requirements	Fire resistance class
fire retardant	L 30
highly fire retardant	L 60
fire-resistant	L 90
Fire resistance 120 mins	L 120

7.3 Ventilation ducts under harmonised technical specifications

Table 7.3.1: Building inspectorate requirements and classifications under DIN EN 13501-3: 2010-02

Building inspectorate requirement	Fire resistance class	fire behaviour, at least suitable classes as per DIN EN 13501-1:2010-01
fire retardant	EI 30 ($v_e h_o$ i↔o)S	as per A 2.2.1.12, Section 3.2 C-s3, d2, otherwise A2 - s1,do
highly fire retardant	EI 60 ($v_e h_o$ i↔o)S	A2 - s1,do
fire-resistant	EI 90 ($v_e h_o$ i↔o)S	A2 - s1,do
Fire resistance 120 mins	EI 120 ($v_e h_o$ i↔o)S	A2 - s1,do

Application rule
Ventilation ducts penetrating fire-resistant components in physical structures and built in-situ from fire protection products (fire resistance cladding) under ETAG 018-1. There is no final technical rule on use in mechanical ventilation systems.

7.4 Fire dampers and shut-off devices under proof of usability that do not come under a harmonised technical specification

Table 7.4.1 Building inspectorate requirement and classification of fire resistance classes for fire dampers in false ceilings

Building inspectorate requirements	Fire resistance classes under DIN 4102-6:1977-09 and additional description for false ceilings pursuant to proof of usability
fire retardant	K 30 U
highly fire retardant	K 60 U
fire-resistant	K 90 U

Table 7.4.2 Building inspectorate requirement and classification of fire resistance classes for fire dampers in exhaust air ducts or ventilation ducts in commercial kitchens

Building inspectorate requirements	Fire resistance class in accordance with DIN 4102-6:1977-09,
fire retardant	K 30
highly fire retardant	K 60
fire-resistant	K 90

Draft

Table 7.4.3 Building inspectorate requirement and classification of fire resistance classes for shut-off devices pursuant to the Specimen Ventilation System Guidelines [MLüAR] Section 7.2

Building inspectorate requirements	Fire resistance class
fire retardant	K30-18017
highly fire retardant	K60-18017
fire-resistant	K90-18017

7.5 Fire dampers as per DIN EN 15650, classification and application and execution conditions

Table 7.5.1 Building inspectorate requirement and allocation of classifications under DIN EN 13501-3

Building inspectorate requirement	Fire resistance class	fire behaviour, at least suitable classes as per DIN EN 13501-1:2010-01
fire retardant	EI 30 ($v_e h_o$ i↔o)-S	A2-s1,d0 for key components: Fire protection housing, damper leaf (shut-off element) including coatings or cladding other components E, small parts ≥ 50 g and 5 cm x 5 cm and electrical drives and control units are not taken into account in terms of fire behaviour
highly fire retardant	EI 60 ($v_e h_o$ i↔o)-S	
fire-resistant	EI 90 ($v_e h_o$ i↔o)-S	
Fire resistance 120 mins	EI 120 ($v_e h_o$ i↔o)-S	

Note: According to the scope of application, the standard does not apply to fire dampers in atmospheres that have a scheduled or unscheduled damaging and/or corrosive effect on these due to chemical reactions. These include atmospheres in exhaust air ducts or ventilation ducts in commercial kitchens.

The requirements for ventilation systems in physical structures under A 2.1.15 are met if fire dampers under DIN EN 15650:2010-09 are used if the following requirements are met in addition to Table 7.5.1:

Application and execution conditions

1 The requirements for physical structures are only met by fire dampers with ventilation ducts attached on at least one side in mechanical ventilation systems.

2 Fire dampers with a mechanical shut-off component may only be used in ventilation ducts of mechanical ventilation systems

- if the nominal activation temperature of the thermal activation device as per DIN EN 15650, Section 5.2.5 in conjunction with ISO 10294-4 is 72°C maximum or for supply air ducts in hot-air heating systems is 95°C maximum,
- if the operational safety over time is demonstrated during open or closed operation of the fire dampers with motor drive for at least 10 000 activations, as required and independently of the protective function (opening and closing cycles) under DIN EN 15650, Section 5.4.2 in conjunction with Annex C is demonstrated
- with the mechanical shut-off component in the axis position demonstrated in accordance with DIN EN 1366-2

3 Fire dampers must also be controlled by a thermal trigger with triggering devices, which respond to smoke (smoke detectors). The suitability of smoke detectors must be demonstrated for the intended use. They must be installed in ventilation ducts.

4 Detailed assembly instructions in line with the proof of performance and the operating instructions provided by the manufacturer or its representative must be available. The manufacturer or their representative must detail in the operating manual the information necessary for installing, inspecting, repairing, maintaining and checking fire damper function.

5 On the initiative of the owner of the ventilation system, checks on fire damper function must carried out while considering basic maintenance requirements according to EN 13306 in conjunction with DIN 31051 at least twice a year. If no malfunctions are revealed in either of the two six-month checks, the fire damper thus only needs to be checked once a year.

8. Furnaces

8.1 General

Combustion plants (furnaces and flues) must be positioned and operated in such a way that they are operationally reliable and fireproof and do not pose any danger or unreasonable inconvenience.

For the application of construction products or components suitable for use in combustion plants and for which harmonised technical specifications exist under Regulation (EU) No. 305/2011, the technical requirements A 2.1.16 and the following rules should be taken from Sections 8.2 to 8.4.

8.2 Furnaces

Table 8.2: Construction products under harmonised technical specifications (hEN)

Item no.	Construction products under hEN	Planning, design and execution
8.2.1	Solid-fuel boiler up to 50 kW, for open systems up to 2 bar EN 12809:2001+A1:2004, EN 12809:2001/AC:2006 and EN 12809:2001/A1:2004/AC:2007 Implemented in Germany through DIN EN 12809:2005-08 and DIN EN 12809/Corrigendum 1:2008-06	8.2.1/1
8.2.2	Solid-fuel stoves EN 12815:2001+A1:2004, EN 12815:2001/AC:2006 and EN 12815:2001/A1:2004/AC:2007 Implemented in Germany through DIN EN 12815:2005-09 and DIN EN 12815/Corrigendum 1:2008-06	
8.2.3	Fireplace inserts including open solid-fuel fireplaces EN 13229:2001+A1:2003 +A2:2004, EN 13229:2001/AC:2006 and EN 13229:2001/A2:2004/AC:2007 Implemented in Germany through DIN EN 13229:2005-10 and DIN EN 13229/Corrigendum 1:2008-06	8.2.1/1 and /2
8.2.4	Solid-fuel room heaters EN 13240:2001+A2:2004, EN 13240:2001/AC:2006 and EN 13240:2001/A2:2004/AC:2007 Implemented in Germany through DIN EN 13240:2005-10 and DIN EN 13240/Corrigendum 1:2008-06	8.2.1/1
8.2.5	Liquid fuel stoves with vapourising burners and flue EN 1:2007 Implemented in Germany through DIN EN 1:2007-12	8.2.1/3
8.2.6	Wood-pellet room heaters EN 14785:2006 Implemented in Germany through DIN EN 14785:2006-09 and DIN EN 14785/Corrigendum 1:2007-10	8.2.1/1 and 8.2.1/4
8.2.7	Slow heat release appliances using solid fuel EN 15250:2007 Implemented in Germany through DIN EN 15250:2007-06	8.2.1/1 and 8.2.1/5

8.2.1/1
Use of furnaces is only permissible if
- the CE mark stipulation of a distance from components of combustible building materials is observed
- adjoining components have thermal resistance ≥ 1.2 m²K/W.

Draft

8.2.1/2
When fireplace inserts are used in furnaces, the provisions of the technical standard for the stove-heating and hot-air heating building (TR-OL 2009), 2010 edition[23]" must be observed.

8.2.1/3
Fireplaces may only be used if the CE mark stipulation of a distance from components of combustible building materials is observed and the adjoining components have thermal resistance ≥ 0.127 m²K/W.

8.2.1/4
There is no final technical rule on installing and operating wood-pellet furnaces. This does not include furnaces with an automatic coating system, which are ready for connection and have a combustion air fan.

8.2.1/5
(Note: The entry with this installation is only required until the publication of the EN 16510 series of standards currently being drafted.)
When using slow heat release appliances, the provisions of Sections 4, 5, 6 and 11 of the technical standard for the stove-heating and hot-air heating building trade TR-OL 2009, 2010 edition, must be observed. The rated heat output determined in accordance with Section 11 must be stated in this regard.

[23] The guidelines can be obtained from Zentralverband Sanitär Heizung Klima, Rathausallee 6, 53757 St. Augustin.

Draft

Types of slow heat release appliances deviating from the following conditions require type approval under MBO § 16a.

1. For combustion chamber building materials and storages mass, only building materials and components made of chamotte with the following product characteristics should be used.

Standard chamotte:

Properties	Abbreviation	Unit of measurement	Requirement
Refractability	Fusion cone	SK	> 15 (from 1440 °C)
Bulk density	ρ	kg/d^{m3}	1.75 ... 2.1
Open porosity	Po	Vol.-%	26 ... 33
Application temperature	AT	°C	≤ 1150
Thermal shock resistance	TSR (water)	n	≤ 25
Thermal expansion (linear)	TE	% mm/m	≥ 0.6 (at 1 000 °C) ≥ 6 (at 1 000 °C)
Accuracy of measurements		Mm	< 100 mm: ± 3.0
Thermal conductivity	λ 20 ... 400 °C λ 400 ... 800 °C	W / mk	0.65 ... 0.90 0.75 ... 0.95
Specific Heat capacity	c 20 … 400 °C c 400 … 800 °C	Wh / (kg K)	0.21 ... 0.26 0.26 ... 0.32
Specific Storage capacity	c' 20 … 400 °C c' 400 … 800 °C	Wh/(d^{m3}K)	0.37 ... 0.55 0.46 ... 0.67

Dense chamotte:

Properties	Abbreviation	Unit of measurement	Requirement
Refractability	Fusion cone	SK	> 15 (from 1 440 °C)
Bulk density	ρ	kg/d^{m3}	2.3 ... 2.6
Open porosity	Po	Vol.-%	22 ... 26
Application temperature	AWT	°C	≤ 1 150
Thermal shock resistance	TSR (water)	n	≤ 25
Thermal expansion (linear)	TE	% mm/m	≥ 0.7 (at 1 000 °C) ≥ 7 (at 1 000 °C)
Accuracy of measurements		Mm	< 100 mm: ± 3.0
Thermal conductivity	λ 20 ... 400 °C λ 400 ... 800 °C	W / mk	0.65 ... 0.90 0.75 ... 0.95
Specific Heat capacity	c 20 … 400 °C c 400 … 800 °C	Wh / (kg K)	0.21 ... 0.26 0.26 ... 0.32
Specific Storage capacity	c' 20 … 400 °C c' 400 … 800 °C	Wh/(d^{m3}K)	0.48 ... 0.68 0.60 ... 0.83

2 Building materials and components for the cladding of heat accumulators must indicate the same properties with respect to the thermal conductivity and storage capacity, such as building materials and components for storage mass.

3 Total thickness of tiles or cladding and the combustion chamber walling must amount to at least 9 cm and maximum 14 cm.

4 Wall thickness first and final draft must have following values:
First draft: at least 7.5 cm, maximum 13.5 cm
Final draft: at least 5.0 cm, maximum 10.0 cm

Draft

5 Combustion chamber inner surfaces, focal surfaces and height of combustion chamber must not exceed the following values:
Combustion chamber inner surfaces: 1.85 m^2
Focal surfaces: 0.2625 m^2
Combustion chamber height: 0.86 m

Slow heat release appliances may only be operated with logs or brown coal briquettes as fuel.

8.3 Flues

When executing flues, the provisions of state building regulations and state fire regulations must be observed. The requirements of DIN V 18160-1:2006-01 also apply, except for Sections 6.2, 6.5, 6.9, 6.10.1 and 6.10.2. The following sections apply with the following amendments and supplements:

8.3.1 Rewording of Section 1, DIN V 18160-1:2006-01

This standard applies to the plan and execution of flues used to draw off waste gases from furnaces operated with solid, liquid or gaseous fuels and to draw off waste gases from heat pumps, combined heat and power plants and stationary combustion engines. The standard regulates the use of construction products for flues.

Construction products for flues tested on the basis of EN 13216-1:2004-11 are only suitable in respect of the distance from combustible building materials in buildings with adjoining walls with thermal resistance R of up to 2.7 m^2K/W (corresponding to approx. 10 cm mineral fibre) and to penetrating ceilings and roofs with thermal resistance R of up to 5.4 m^2K/W.

The use of flues in buildings with wall, ceiling and roof structures made of or with higher thermal resistance are not yet taken into account in the harmonised product standards.

The application standard does not apply to:

Air exhaust chimneys, mixed-use flues for sealed solid-fuel furnaces, chimneys in overpressure operation, connectors for solid-fuel furnaces in overpressure operation, free-standing flues (height above the uppermost statically effective support > 3 m) and assembled flues with temperature class higher than T400.

8.3.2 Rewording of Section 5.2.1 Marking, DIN V 18160-1:2006-01

Flue markings must comprise at least following performance indicators, depending on the scope of application:

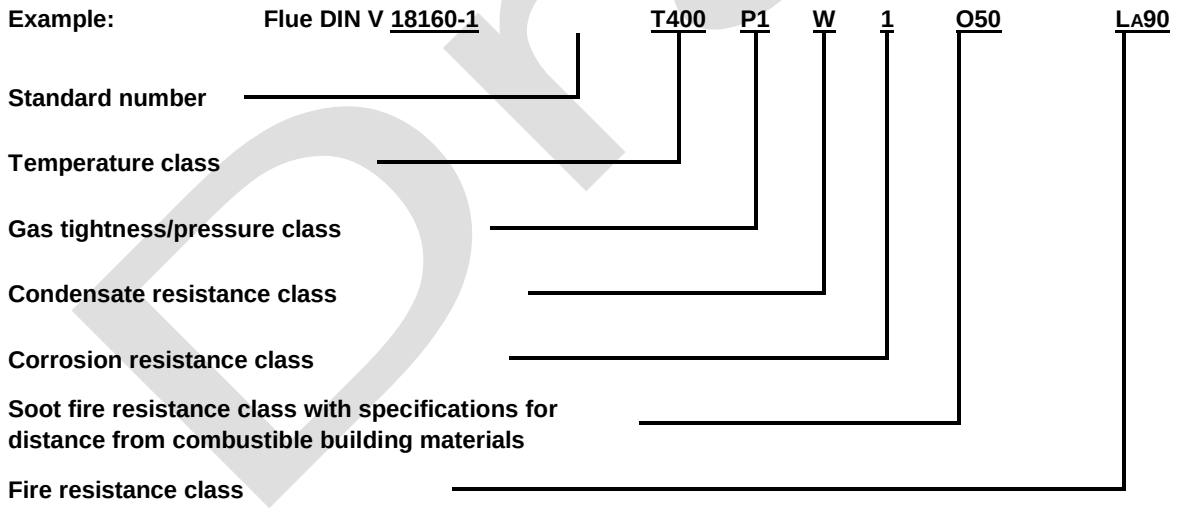

Each draft from the flue must have complete, visibly durable machinery labelling (e.g. aluminium adhesive plate). Possible affixing locations are the cleaning hatches (doors) in the installation area of the furnace or at the waste gas inlet in the flue.

Each performance indicator must correspond to the required class or a higher class in the following order:

T600 >T450 >T400 >T300 >T250 >T200 >T160 >T140 >T120 >T100 >T080;

H > P > N; Wx > Dx; D3 > D2 > D1; W3 > W2 > W1; G > O.

Temperature class
The temperature class indicates to what nominal temperature the flue can be used.

Draft

Gas tightness/pressure class
The gas tightness class under DIN EN 1443/pressure class indicate for which mode of operation the flue is suitable.

Condensate resistance class
W for flues that can be systematically operated while damp;

D for flues that must be systematically operated under dry conditions.

Corrosion resistance class
Fuel-dependent corrosion resistance classes for flues can be found in DIN EN 1443.

Soot fire resistance class
Oxx for flues without soot fire resistance;

Gxx for flues with soot fire resistance.

The distance from the outer surface area of the flue to combustible materials is indicated by xx, where xx is the numerical value of the distance in rounded millimetres.

Fire resistance class
Fire resistance class L_A indicates the period for which the flue holds up under exposure to fire (working direction from outside to outside/space barrier and thermal insulation). The possible classes are set out in the following table:

Fire resistance class under DIN 18160-60

Building inspectorate requirements	Fire resistance classes	
fire retardant	L_A30*	Fire resistance time ≤ 30 min.
fire-resistant	L_A90*	Fire resistance time ≤ 90 min.

* The fire resistance indicated must be tested with thermal pre-treatment according to the chosen temperature class (e.g. T400).

The flue can itself show the requisite fire resistance or it can meet it combined with a shaft.

8.3.3 Rewording of Section 7.2.3 Construction products for outer shell, DIN V 18160-1:2006-01
Outer shells must have performance characteristics that correspond at least to performance classes equal to or higher than required for the assembled chimney marking envisaged. Construction products under DIN EN 1858, DIN EN 12446, DIN EN 13069 and DIN EN 1806 may be used for this purpose and must be marked T400 and G at a minimum. Where requirements are imposed on use, this must be demonstrated as per DIN 18160-60. The evidence may be provided for the outer shell alone or for structures with multiple shells.

The following may also be used to manufacture outer shells from masonry:

- Masonry bricks as per EN 771-1 in connection with DIN 20000-401 or alternatively DIN 105-100 with wall thickness ≤ 11.5 cm;
- Perforated brick B and C as per DIN EN 771-1 with wall thickness ≤ 24 cm
- Sand-lime bricks as per DIN EN 771-2 in connection with DIN 20000-402 or DIN V 106 with wall thickness ≤ 11.5 cm;
- Granulated slag bricks as per DIN 398 with wall thickness ≤ 11.5 cm
- Aerated concrete blocks as per DIN EN 771-4 in connection with DIN 20000-403 or DIN 4165-100 with wall thickness ≤ 10 cm;
- Hollow bricks as per DIN 18151 with wall thickness ≤ 17.5 cm;
- Solid masonry bricks of lightweight concrete as per DIN EN 771-3 in connection with DIN 20000-403 or DIN 18152-100 with wall thickness ≤ 11.5 cm qualify as equivalent.

Outer shells made from the above-mentioned masonry correspond to classification T400 G50 L_A90.
Section 7.1(2) apply accordingly to outer shell construction type.

8.3.4 Rewording of Section 7.2.4 and 8.1.1.4 Construction products for insulation shell, DIN V 18160-1:2006-01
Insulating materials as per DIN EN 14303 may be used for assembled flues in line with the requirements for the flue envisaged.

1. Insulating materials for assembled chimneys

Insulating materials for assembled chimneys must withstand the temperature effects of soot fire. Under DIN EN 14303 soot fire resistance is not verifiable.

Insulation shells made of insulating materials as per DIN EN 14303 must be at least 3 cm thick and have thermal resistance of at least 0.4 m²K/W at 300°C.

Inner shells as per DIN EN 1856-1 with thermal insulation of at least 3 cm in conjunction with that for outer shells stated in 7.2.3 do not require an insulation shell.

2. Insulating materials for assembled waste gas pipes

Insulating materials as per DIN EN 14303 may be used for assembled waste gas pipes. The upper application limit temperature of the insulating material must be higher than or equal to the required temperature class for the flue.

3. Insulating materials for connectors and single-layer metallic flues

Insulating materials directly laid on the surfaces of metallic flues or connectors must be non-combustible. The upper application limit temperature of the insulating material must be higher than or equal to the required temperature class for the flue.

8.3.5 Fire behaviour of flues

Components of flues must be at least normally flammable in respect of their fire behaviour under state building regulations.

Where components for flues are classified as class A1 pursuant to Commission Decision 96/602/EC ((amended by Commission Decisions 2000/605/EC and 2003/424/EC) or if these components are classified under DIN 4102-4, they may be used in line with their classification in respect of fire behaviour without additional proof.

Table 8.3: Construction products or construction kits under harmonised technical specifications (hEN)

8.3.1	Metal flue liners and connecting flue pipes for chimneys EN 1856-2:2009 Implemented in Germany through DIN EN 1856-2:2009-09	DIN V 18160-1:2006-01 and also Supplemental Sheet 1 to DIN V 18160-1:2006-01 and DIN V 18160-1 Supplemental Sheet 1 Corrigendum 1:2007-10 in conjunction with 8.3
8.3.2	Concrete interior pipes for flues EN 1857:2010 Implemented in Germany through DIN EN 1857:2010-08	DIN V 18160-1:2006-01 in conjunction with 8.3
8.3.3	Concrete flue blocks for chimneys EN 1858:2008+A1:2011 Implemented in Germany through DIN EN 1858:2011-09	DIN V 18160-1:2006-01 in conjunction with 8.3
8.3.4	Concrete outer shells for chimneys EN 12446:2011 Implemented in Germany through DIN EN 12446:2011-09	DIN V 18160-1:2006-01 in conjunction with 8.3
8.3.5	soot-fire-resistant system flues with ceramic flue liners EN 13063-1:2005 and EN 13063-1/A1:2007 Implemented in Germany through DIN EN 13063-1:2007-10	DIN V 18160-1:2006-01 in conjunction with 8.3
8.3.6	soot-fire-resistant flues with ceramic flue liners EN 13063-2:2005 and EN 13063-2/A1:2007 Implemented in Germany through DIN EN 13063-2:2007-10	DIN V 18160-1:2006-01 in conjunction with 8.3 and 8.3.1/1
8.3.7	Ceramic outer shells for system flues EN 13069:2005 Implemented in Germany through DIN EN 13069:2005-12	DIN V 18160-1:2006-01 in conjunction with 8.3

Draft

8.3.8	System flues with plastic flue liners EN 14471:2005 Implemented in Germany through DIN EN 14471:2005-11	DIN V 18160-1:2006-01 in conjunction with 8.3
8.3.9	Ceramic die blocks for flues EN 1806:2006 Implemented in Germany through DIN EN 1806:2006-10	DIN V 18160-1:2006-01 in conjunction with 8.3
8.3.10	Crowns for sealed flues for C6 gas appliances EN 14989-1:2007 Implemented in Germany through DIN EN 14989-1:2007-05	DIN V 18160-1:2006-01 and also Supplemental Sheet 1 to DIN V 18160-1:2006-01 in conjunction with 8.3 and 8.3.1/2
8.3.11	Air exhaust systems with Ceramic flue liners EN 13063-3:2007 Implemented in Germany through DIN EN 13063-3:2007-10	DIN V 18160-1:2006-01 in conjunction with 8.3
8.3.12	Exhaust and air pipes for sealed furnaces EN 14989-2:2007 Implemented in Germany through DIN EN 14989-2:2008-03	DIN V 18160-1:2006-01 and also Supplemental Sheet 1 to DIN V 18160-1:2006-01 in conjunction with 8.3 and 8.3.1/2
8.3.13	Ceramic flue liners; - flue liners operating under wet conditions - EN 1457-2:2012 Implemented in Germany through DIN EN 1457-2:2012-04	DIN V 18160-1:2006-01 in conjunction with 8.3 and 8.3.1/3
8.3.14	Ceramic flue liners for Chimneys - Flue liners operating under dry conditions – EN 1457-1:2012 Implemented in Germany through DIN EN 1457-1:2012-04	DIN V 18160-1:2006-01 in conjunction with 8.3
8.3.15	Components and sections of System flues with metallic flue liners EN 1856-1:2009 Implemented in Germany through DIN EN 1856-1:2009-09	DIN V 18160-1:2006-01 in conjunction with 8.3

8.3.1/1
System flues with ceramic flue liners with W 3 O classification may not be used.

8.3.1/2
Flue terminals, components, metallic exhaust and air pipes under DIN EN 14989-1:2007-05 and DIN EN 14989-2:2007-05 in class 80 or 99 must correspond to corrosion class V1, V2 or V3 under DIN EN 1856-1:2009-09.

8.3.1/3
Flue liners under EN 1457-2 with condensation resistance class WA may only be used in permanently rear-ventilated outer shell as per DIN V 18160-1:2006-01, Section 8.2.1, third bullet point. A condensate drain is required for these flues.

Assembly chimney types with class WB, WC or WD inner shells may not be operated in conditions.

Draft

8.4 Insulating materials for combustion plants (furnaces and flues)

Table 8.4: Construction products under harmonised technical specifications (hEN)

Item no.	Construction products under hEN	Planning, design and execution
8.4.1	Thermal insulation materials for the technical building equipment and for operating equipment in the industry - Factory-made products of mineral wool (MW) EN 14303 Implemented in Germany through DIN EN 14303:2010-04	Section 8.3
8.4.2	Thermal insulation materials for the technical building equipment and for operating equipment in the industry - Factory-made products of calcium silicate (CS) EN 14306 Implemented in Germany through DIN EN 14306:2013-04	8.4.1/1
8.4.3	Thermal insulation materials for building services and for operating equipment – factory-made expanded perlite (EP) and expanded vermiculite (EV) EN 15501 Implemented in Germany through DIN EN 15501:2013-07	8.4.1/2

8.4.1/1
The applicability of factory-made thermal insulation layers of calcium silicate (CS) as the initial insulating material on furnaces cannot be verified under DIN EN 14306:2013-04.

8.4.1/2
The applicability of factory-made thermal insulation layers of expanded perlite (EP) and expanded vermiculite (EV) as the initial insulating material on furnaces cannot be verified under DIN EN 15501:2013-07.

9. Heat extractors

Table 9.1 Minimum values for key properties of heat extractors under DIN EN 12101 -2:2003-09 for use in roofs as per A 2.1.21.3:

DIN EN 12101-2	Minimum performance requirement
4.1	4.1.1 a) Thermocouple and manual release
4.2	fulfilled
4.4.	Specifications (m²), width ≤1.0 m
7.1.1	Re 50
7.1.3	RE 50
7.2.1.1	SL 500
7.3.1	T (0)
7.4.1	WL 1500
7.5.1	B 300
7.5.2	E – d2

A 2.1.9 must be observed in respect of position and arrangement for the use of heat extractors as transparent areas in the roof covering if the performance requirement under Section 7.5.2 of DIN EN 12101-2 is not stated as at least A2 –

Draft

s1,d0; otherwise, for use in the roof covering, evidence must be provided pursuant to A. 2.1.9 for roof covering resistant to flying sparks and radiating heat (see Section 3, Table 3.2) or the physical structure must adhere to the distances set out under § 32(2) MBO. Use in transparent roof coverings that may have low flammability and do not have flaming droplets is permissible if the performance requirement under Section 7.5.2 of DIN EN 12101-2 is stated as at least C – s3,d0.

10. Smoke extraction systems

10.1 General

To demonstrate the fire resistance of physical structures using construction products or components for smoke extraction systems with proof of usability pursuant to § 17 MBO, or for construction types pursuant to § 16a MBO, the allocation of fire resistance classes may be taken from the DIN 4102 series of standards as per the requirements of A 2.1.21.2 in Section 10.4.

To demonstrate the fire resistance of physical structures using construction products or components for smoke extraction systems for which there are harmonised technical specifications under Regulation (EU) No. 305/2011 pursuant to the Official Journal of the European Union C 209/03 of 10 June 2016 and C 179/4 of 13 May 2016, fire resistance classes may be allocated under DIN 13501 to the requirements of A 2.1.21.2 and Sections 10.5 and 10.6.

10.2 Smoke extractors under DIN EN 12101-2 in smoke extraction systems under the Ordinance on the Construction and Operation of Places of Public Assembly [Versammlungsstätten-verordnung], the Sales Outlet Ordinance [Verkaufsstättenverordnung] and the Industrial Buildings Directive [Industriebaurichtlinie] as per A 2.1.21.2, Application and execution conditions

The requirements for removing smoke from physical structures using natural smoke extraction systems as per A 2.1.21.2 are met when natural smoke extraction systems as per DIN EN 12101-2 are met if the minimum values for the key characteristics of Table 10.2.1 are adhered to and the smoke extractors are planned, designed and built according to use.

Table 10.2.1: Minimum values for key properties of smoke extractors under DIN EN 12101-2:2003-09 for use as per A 2.1.21.2

	Use in	
Key property	Performance requirement for necessary stairwells	Performance requirement for smoke extraction systems
4.1	Thermocouple and manual activation	Thermocouple and activation device as per 4.1.1 b) or c) or d)
4.2	fulfilled	fulfilled
6	Specifications (m²)	Specifications ≤ 1.5 m² for industrial building specifications (m²)
7.1.1	Re 50	Re 50
7.1.3	Re 50	Re 50
7.2.1.1	SL 500	SL 500
7.3.1	T (-05)	T (-05)
7.4.1	WL 1500	WL 1500
7.5.1	B 300	B 300
7.5.2	E – d2	E – d2

A 2.1.9 must be observed in respect of position and arrangement for the use of smoke extractors as transparent areas in the roof covering if the performance requirement under Section 7.5.2 of DIN EN 12101-2 is not stated as at least A2 – s1,d0; otherwise, for use in the roof covering, evidence must be provided pursuant to A. 2.1.9 for roof covering resistant to flying sparks and radiating heat (see Section 3, Table 3.2) or the physical structure must adhere to the distances set out under § 32(2) MBO.

Draft

10.3 Mechanical smoke extractors under DIN EN 12101-3 in smoke extraction systems under the Ordinance on the Construction and Operation of Places of Public Assembly [Versammlungsstätten-verordnung], the Sales Outlet Ordinance [Verkaufsstättenverordnung] and the Industrial Buildings Directive [Industriebaurichtlinie] as per A 2.1.21.2, Application and execution conditions

Mechanical smoke extraction systems must be able to withstand the temperatures of the combustion gas to be extracted for a sufficient length of time.

Mechanical smoke extractors must be used in smoke extraction systems in accordance with DIN EN 12101-3:2015-12. There is no final technical rule on the use of mechanical smoke extractors.

The performance requirements of Table 10.3.1 apply to the use of mechanical smoke extractors.

Table 10.3.1 Performance requirements for mechanical smoke extractors

Key property	Use in mechanical smoke extraction systems of rooms	
	Airflow of smoke extraction system	
	≥ 40 000 m³/h	> 40 000 m³/h
Temperature resistance	≤ 600°C at least 30 minutes	≤ 300°C at least 30 minutes
Fire behaviour in accordance with DIN EN 13501-1:2010-02	E – d2	E – d2

10.4 Smoke extraction ducts tested and classified as per DIN V 18232-6:1997-10

Table 10.4.1: Building inspectorate requirement and allocation of fire resistance classes under DIN 18232-6:1997-10

Building inspectorate requirements	Fire resistance class
fire retardant	L 30, category 3 and pressure level 1/2/3[1]
highly fire retardant	L 60, category 3 and pressure level 1/2/3[1]
fire-resistant	L 90, category 3 and pressure level 1/2/3[1]

[1] according to proven pressure level

10.5 Smoke extraction ducts under harmonised technical specifications

Table 10.5.1: Building inspectorate requirements and classifications under DIN EN 13501-4: 2010-01

Building inspectorate requirement	Fire resistance class	fire behaviour, at least suitable classes as per DIN EN 13501-2:2010-01
fire retardant	EI 30 (v_e – h_o) S *[1] multi	A2 – s1, d0
highly fire retardant	EI 60 (v_e – h_o) S *[1] multi	
fire-resistant	EI 90 (v_e – h_o) S *[1] multi	
Fire resistance 120 mins	EI 120 (v_e – h_o) S *[1] multi	

[1] depending on intended use: 500 Pa, 1 000 Pa or 1 500 Pa

Application and execution conditions
The requirements for removing smoke from physical structures using mechanical smoke extraction systems as per A 2.1.21.2 are met when smoke extraction ducts from smoke extraction duct parts as per DIN EN 12101-7:2011-08 are used if the following requirements are adhered to:

1 Smoke extraction duct parts tested according to EN 1366-9 must only be used for horizontally mounted smoke extraction ducts in smoke extraction systems in a single fire compartment.

Detailed assembly instructions in line with the proof of performance and the operating instructions provided by the manufacturer or its representative must be available.

Draft

2 There is no final technical rule on the use of a construction product or construction kit as per ETAG 018, Parts 1 and 4 or EAD No. **….** to erect smoke extraction ducts in mechanical smoke extraction systems penetrating fire-resistant components in buildings.

10.6 Smoke extraction dampers in accordance with DIN EN 12101-8:2011-08

Table 10.6.1: Building inspectorate requirement and allocation of fire resistance classes under DIN 13501-4:2010-01

Building inspectorate requirement	Fire resistance class	fire behaviour, at least suitable classes as per DIN EN 13501-2:2010-01
fire retardant	EI 30 (v_e[1] - h_o[2] - i↔o) S *[3] C_{xx}[4] MA[5] multi	A2 – s1,d0 for key components
highly fire retardant	EI 60 (v_e[1] - h_o[2]- i↔o) S *[3] C_{xx}[4] MA[5] multi	
fire-resistant	EI 90 (v_e[1] - h_o[2]- i↔o) S *[3] C_{xx}[4] MA[5] multi	
Fire resistance 120 mins	EI 120 (v_e[1] - h_o[2]- i↔o) S *[3] C_{xx}[4] MA[5] multi	

[1] depending on intended use: v_{ew}, v_{edw}, v_{ed}
[2] depending on intended use: h_{ow}, h_{odw}, h_{od}
[3] depending on intended use: 500 Pa, 1 000 Pa or 1 500 Pa
[4] depending on intended use: C_{300} or C_{10000}
[5] for use in mechanical smoke extraction systems

Application and execution conditions
The requirements for removing smoke from physical structures using mechanical smoke extraction systems as per A 2.1.21.2 are met when smoke extraction dampers as per DIN EN 12101-8:2011-08 are used if the following requirements are adhered to:

Smoke extraction dampers for use in mechanical smoke extraction systems must be at least classified E_{300}30(v_e-h_o-i↔o) S500 C_{xx}[6]MA single under DIN EN 13501-4: 2010-01.

[6] depending on intended use: C_{300} or C_{10000}

Smoke extraction dampers with a mechanical shut-off component may only be used in mechanical smoke extraction systems

- in the axis position of the mechanical shut-off component demonstrated
  - after the fire resistance testing under EN 1366-2 for smoke extraction dampers in smoke extraction systems for multiple sections or
  - under fire exposure at constant temperature for smoke extraction dampers in smoke extraction systems of individual sections.

Detailed assembly instructions in line with the proof of performance and the operating instructions provided by the manufacturer or its representative must be available. The manufacturer or their representative must detail in the operating manual the information necessary for installing, inspecting, repairing, maintaining and checking fire damper function.

On the initiative of the owner of the smoke extraction system, checks on smoke extraction damper function must carried out while considering basic maintenance requirements according to DIN EN 13306 in conjunction with DIN 31051 at least every half year. If no malfunctions are revealed in either of the two six-month checks, the smoke extraction damper thus only needs to be checked once a year.

11. Pressure ventilation systems (smoke extraction systems)
Pressure ventilation systems must be automatically activated. The necessary pressure difference must be set no later than 60 *seconds* after activation.

12 Service ducts and shafts, including opening barriers

12.1 General
To demonstrate the fire resistance of physical structures with service ducts and shafts, including opening barriers, with proof of usability pursuant to § 17 MBO, or for construction types pursuant to § 16a MBO, the allocation of fire resistance classes may be taken from the DIN 4102 series of standards as per the technical requirements of A 2.1.14 in Section 12.2.

Draft

To demonstrate the fire resistance of physical structures with service ducts for which there are harmonised technical specifications under Regulation (EU) No. 305/2011 pursuant to the Official Journal of the European Union C 209/03 of 10 June 2016 and C 179/4 of 13 May 2016, fire behaviour classes may be allocated according to DIN 13501 in line with the requirements of A 2.1.14 of Section 12.3.

12.2 Service ducts and shafts including opening barriers classified under DIN 4102-11:1985-12

Table 12.2.1: Allocation of classifications according to DIN EN 4102-11

Building inspectorate requirements	Service shafts and ducts
fire retardant and of incombustible materials	I 30
highly fire retardant and of incombustible materials	I 60
fire-resistant and of incombustible materials	I 90
fire resistance 120 minutes and of non-combustible materials	I 120

12.3 Construction kits for service ducts of prefabricated fittings and accessories under harmonised technical specifications, a European Technical Assessment under (ETA) pursuant to EAD 350003.00-1109, classified under DIN EN 13501-2:2010-02, and application and execution conditions

Table 12.3.1: Allocation of classifications under DIN EN 13501-2:2010-02 for service ducts

Building inspectorate requirements	Service ducts	fire behaviour, at least suitable classes as per DIN EN 13501-2:2010-01
fire retardant and of incombustible materials	EI 30($v_e h_o$ i↔o)	A2 – s1, d0
highly fire retardant and of incombustible materials	EI 60($v_e h_o$ i↔o)	
fire-resistant and of incombustible materials	EI 90($v_e h_o$ i↔o)	
Fire resistance 120 mins	EI 120($v_e h_o$ i↔o)	

13 Fire-resistant glazing

To demonstrate the fire resistance of physical structures with fire-resistant glazing with proof of usability pursuant to § 17 MBO, or for construction types pursuant § 16a MBO, the allocation of fire resistance classes may be taken from the DIN 4102 series of standards in line with the requirements of A 2.1.6, A 2.1.7, A 2.1.8, A 2.1.9 and A 2.1.12.

Table 13.1: Allocation of classifications under DIN 4102-13:1990-05

Building inspectorate requirements	Fire-resistant glazing
fire retardant	F 30
highly fire retardant	F 60
fire-resistant	F 90
Fire resistance 120 mins	F 120

Fire-resistant glazing classified as G 30, G 60, G 90 or G 120 under DIN 4102-13 do not meet the "fire-retardant", "highly fire-retardant", "fire-resistant" or "fire resistance 120 minutes".

To demonstrate the fire resistance of physical structures with fire-resistant glazing for which as construction kits there are harmonised technical specifications for non-load-bearing internal dividing walls under Regulation (EU) No. 305/2011, the allocation of fire resistance classes may be taken from the DIN EN 13501 series of standards as per the requirements of A 2.1.6, A 2.1.7, A 2.1.8, A 2.1.9 and A 2.1.12 in Section 4.3, Table 4.3.1.

14 Special fire protection products

14.1 Fire protection agents

14.1.1 General

To demonstrate the fire behaviour of physical structures when fire protection agents are used under proof of usability pursuant to § 17 MBO, the allocation of fire resistance classes may be taken from the DIN 4102-1 series of standards in line with the requirements of A 2.1.2 in Section 1.2.

To demonstrate the fire behaviour of physical structures when fire protection agents are used for which there are harmonised technical specifications under Regulation (EU) No. 305/2011 pursuant to the Official Journal of the European Union C 209/03 of 10 June 2016 and C 179/4 of 13 May 2016, fire behaviour classes may be allocated according to DIN 13501 in line with the technical requirements of A 2.1.2 in Section 1.3.

14.1.2 Construction products fitted with fire protection agents under harmonised specifications (ETA) Application and execution conditions

Fire protection agents are not verified for use on floorings and/or substrates subject to moisture and UV radiation.

14.2 Reactive fireproof coatings on steel components

14.2.1 General

To demonstrate the fire resistance of physical structures when reactive fireproof coatings are used on steel components under proof of usability pursuant to § 17 MBO, fire resistance classes may be allocated under DIN 4102-2 to the requirements of A 2.1.3, A 2.1.4 and A 2.1.8 and Section 4.1 and 4.2.

To demonstrate the fire resistance of physical structures where reactive fireproof coatings are used on steel components for which there are harmonised technical specifications under Regulation (EU) No. 305/2011 pursuant to the Official Journal of the European Union C 209/03 of 10 June 2016 and C 179/4 of 13 May 2016, the allocation of fire resistance classes may be taken from DIN 13501 in line with the requirements of A 2.1.3, A 2.1.4 and A 2.1.8 and Section 4.3.

14.2.2 Reactive fireproof coatings on steel components under harmonised technical specifications (ETA) Application and execution conditions

There is no final technical rule on the use of a construction product or construction kit under ETAG 018-1 and -2/EAD for fire-resistant components.

14.3 Linear joint sealants

The following building inspectorate application and execution conditions apply to the use of fire protection products or fire protection kits as linear joint sealants for sealing and closing joints and openings and to stop the propagation of flames in the event of fire under ETAG 026-3. To ensure compliance with the structural requirements when using these products:
Joint sealants may be used to close horizontal and vertical linear joints (connection, structural and expansion joints) in or between fire-resistant, space-enclosing components.
Joints are not independently considered under the building regulations.
The declaration of "fire resistance" for joint sealing does not replace the requirement to provide evidence of fire resistance for the entire component, including the joint(s).

Draft

Appendix Explanatory notes on classification criteria and additional classification information

Derivation of abbreviations	Criterion	Scope of Application
R (Résistance)	Load-bearing capacity	to describe fire resistance
E (Étanchéité)	Space barrier	
I (Insulation)	Thermal insulation (under fire exposure)	
W (Radiation)	Limiting the passage of radiation	
M (Mechanical)	Mechanical effect on walls (impact stress)	
S_a (Smoke)	Limiting smoke permeability (sealing, leakage rate), meets the requirements at ambient temperature	tightly sealed barriers
S_{200} ($Smoke_{max.\ leakage\ rate}$)	Limiting smoke permeability (sealing, leakage rate), meets the requirements at ambient temperature and at 200 °C	Smoke protection barriers (including for fire protection barriers as an additional requirement)
S (Smoke)	Smoke tightness (limiting smoke permeability)	Smoke extraction ducts, smoke extraction dampers, ventilation ducts, fire dampers
C... Closing	Self-closing property (where applicable with number of loading cycles) including permanent functionality	Smoke doors, fire protection barriers (including conveyor system barriers)
C_{xx}	Operational safety over time (number of opening and closing cycles)	Smoke extraction dampers
P	Maintaining energy supply and/or signal transmission	Electrical cable systems in general
K_1, K_2	Fire protection ability	Wall and ceiling cladding (fire protection cladding)
I_1, I_2	different thermal insulation criteria	Fire protection barriers (including conveyor system barriers)
i→o i←o i↔o (in - out)	Direction of classified fire resistance time	Non-load-bearing external walls, service shafts/ducts, ventilation ducts/fire dampers; smoke extraction dampers, acc. to Tab. b) also flues(?)
a↔b (above - below)	Direction of classified fire resistance time	False ceilings
ve, ho (vertical, horizontal)	classified for vertical/horizontal installation	Ventilation ducts, fire dampers, smoke extraction ducts
$v_{(}h_{)}$	classified for vertical/horizontal installation in walls	Smoke extraction dampers
$v_{ed,}$ h_{od}	classified for vertical/horizontal installation in pipes	Smoke extraction dampers
$v_{edw,}$ h_{odw}	classified for vertical/horizontal installation in walls and pipes	Smoke extraction dampers
U/U (uncapped/uncapped)	Pipe end open inside test furnace/pipe end open outside test furnace	Pipe bulkheads
C/U (capped/uncapped)	Pipe end closed inside test furnace/pipe end open outside test furnace	Pipe bulkheads
U/C	Pipe end open inside test furnace/pipe end closed outside test furnace	Pipe bulkheads
MA	Manual triggering	Smoke extraction dampers
multi	Suitability for penetrating or building into one or more fire-resistant components	Smoke extraction ducts, smoke extraction dampers

Draft

Technical Rule – WDVS with EPS, Socket fire test procedure

1. Test stand

The test stand must be protected from the weather and consists of two connected walls adjoining each other at right angles. The dimensions of the test stand walls on which the test samples are assembled:

- the long side is at least 4.0-m wide
- the short side is at least 2.0-m wide
- the height of the test stand is at least 9.8 m.

The walls of the test stand must be made of aerated concrete blocks approx. 25-cm thick with bulk density ≤ 600 kg/m³, coated on the WDVS application area with mineral-based plaster.

The following figure shows the plan and layout of the test stand.

Figure 1

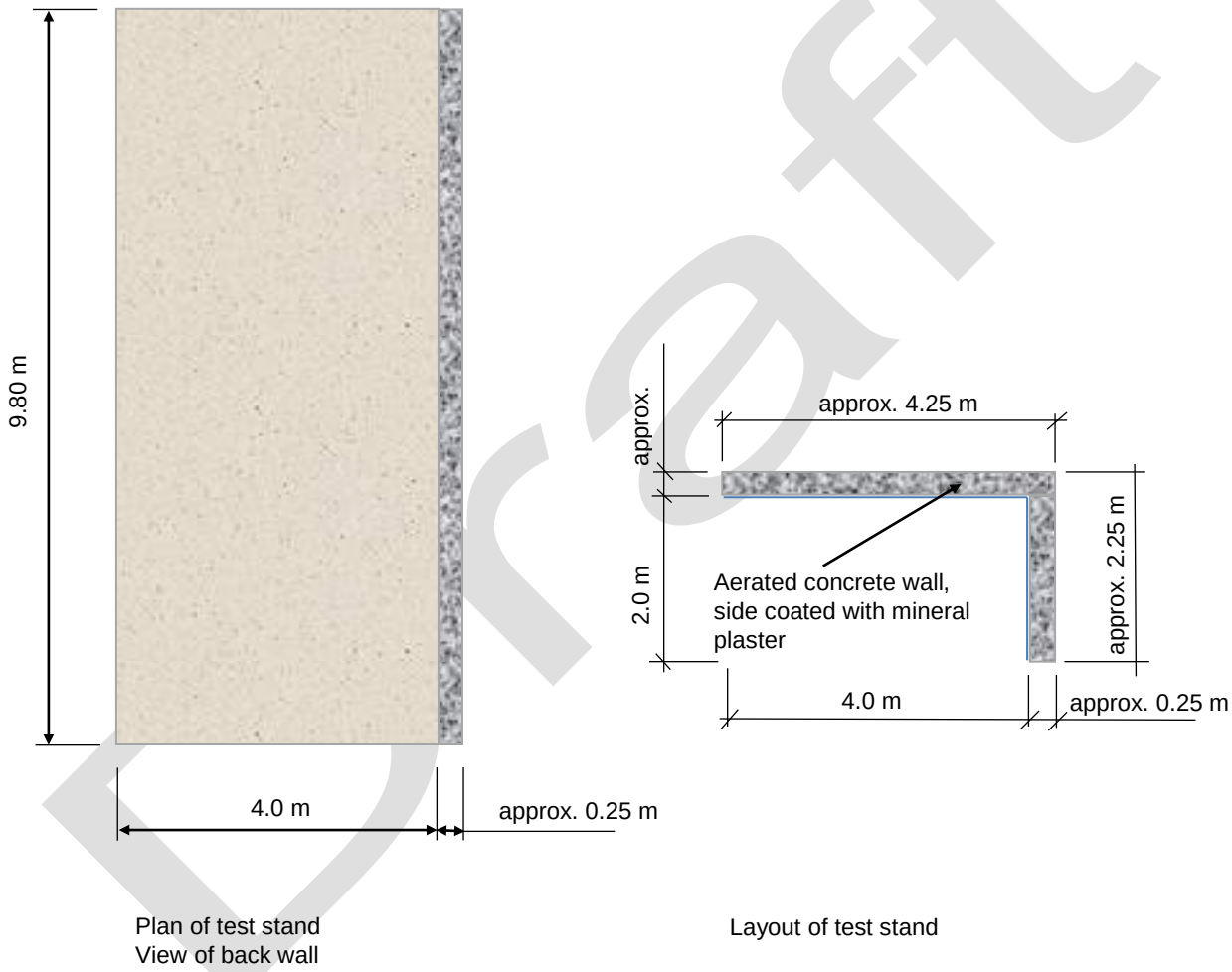

All dimensions given are minimum dimensions.

For testing WDVS to be applied to walls made of framework load-bearing structures (e.g. timber or steel) with outside panelling, separate specifications are required for the test stand.

Draft

2. Metrological test stand equipment

To carry out testing, the test stand and applied WDVS must be fitted with thermocouples (type K as per EN 60684, Ø 3 mm) pursuant to Figure 2.

Figure 2

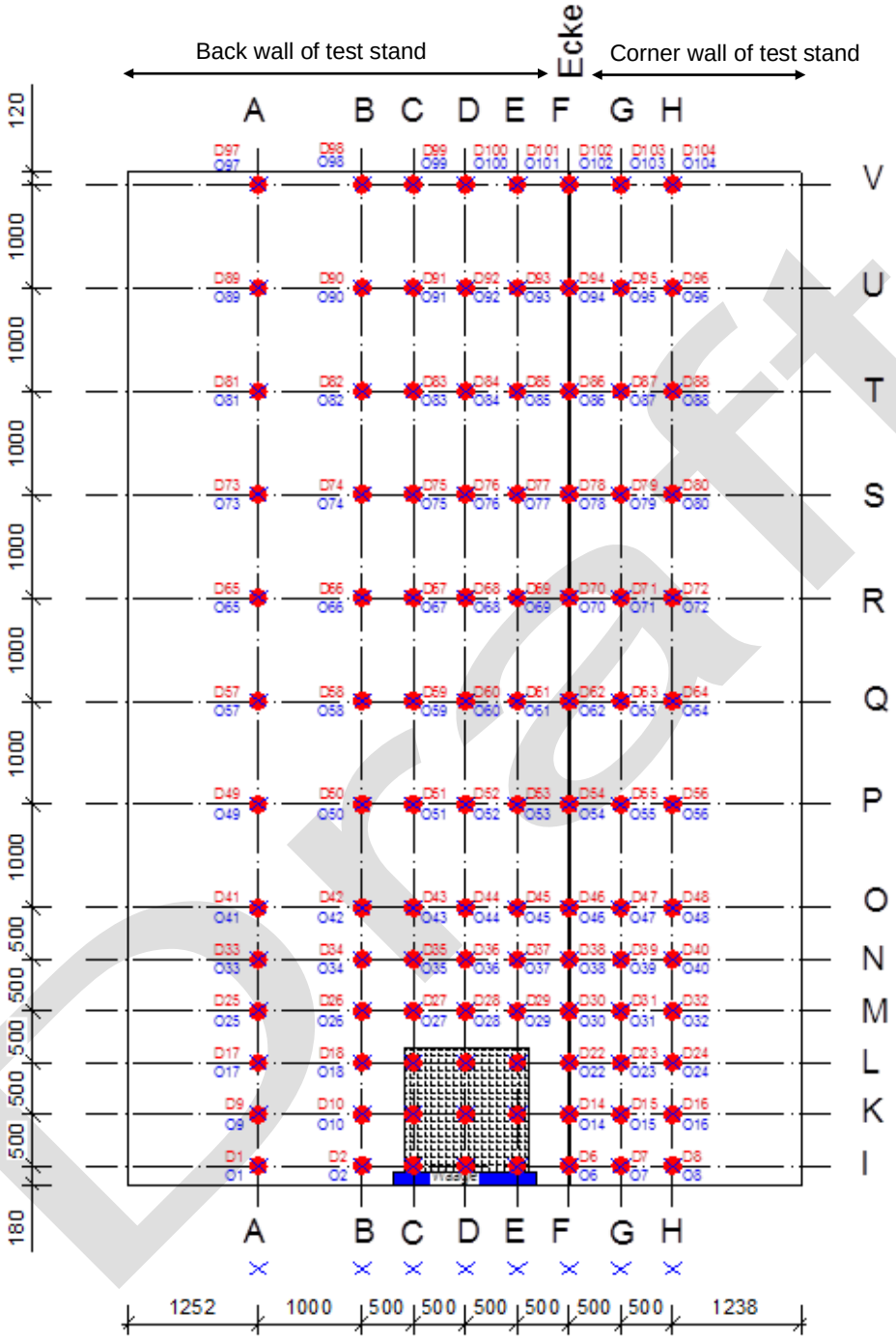

●	D1 to D104	Measurement points in middle of insulating material (TE inserted from the reverse side of the test stand)
X	O1 to O104	Measurement points 20mm in front of the surface of the applied WDVS

A test recording must also be made with photo camera and video recording (HD standard).

Draft

3. Primary fire source

A 200 kg (± 5 kg) pinewood crib should be used as the primary fire source in the test (bulk density 475 ± 25 kg/m³) with a surface area of approx. 1.1 x 1.1 m. This should be made from wooden sticks with dimensions W x H x L = 40 (± 2) x 40 (± 2) x 1100 (± 10)mm.

The wooden sticks should be positioned across each other in layers (90°) with a wood: air ratio of ≈ 1 : 1, with the lowermost layer positioned parallel to the back wall. The number of wooden sticks required in the uppermost layer of the crib should be kept as low as possible and distributed evenly so that the above-mentioned wood weight is maintained. The layers should be nailed to each other.

The wood must be stored in a standard climate room as per DIN EN 13238 until constant weight is achieved and may only be taken out on the day before the test to build the crib.

The lower edge of the crib should be approximately 15 - 20 cm above the floor of the test room and the distance of the crib to the surface of the WDVS applied on the back and corner wall of the test stand should be about 10 cm. For ignition, four troughs filled with 400 ml of isopropanol (width 25 mm x length 1 100 mm x 20 mm height) should be inserted over the lowest position of the wooden sticks in the crib. An open flame serves as an igniter.

4. Conditioning of the WDVS to be tested

A conditioning time of 21 days is required for the fully applied WDVS test sample on the test stand. This time may be reduced if the humidity in the plaster system is below 6 % (approximately double residual humidity) and the minimum standing time of 14 days is adhered to. Humidity can be determined on a reference sample stored in the same atmosphere.

The ambient temperature during the conditioning time must be between 10 °C and 30 °C 1 m in front of the test stand and 1 m above the floor of the test room.

5. Performance of the test

Before starting the test, the ambient temperature in the test room must be between 5 °C and 30 °C 1.5 m in front of the test stand at a height of 1.5 m above the test room floor.

Charring of the test fire and test sample must take place under free ventilation conditions. The effect of wind or mechanical smoke on the test run should be avoided or kept to an acceptable minimum. This can be ensured if during testing with a vane anemometer placed in the middle directly before starting the test, flow velocity does not exceed 0.5 m/s – temporarily 1 m/s maximum – in the centre at 1m above the top of the crib and 100 mm from the WDVS surface. Any changes to the haul-off conditions during the test time must be documented (e.g. increased haul-off speed during mechanical, controllable smoke extraction, enlargement/reduction in ventilation and exhaust openings during natural smoke extraction).

The test time is at least 25 minutes (direct WDVS fire impact ≤ 20 minutes must be kept). It begins when the crib is ignited using the isopropanol. At the end of the test time, the crib must be extinguished so that the test samples are not affected. At this point, a monitoring period begins that should end no earlier than 60 minutes after the test begins.

The following measurement data must be taken during the test:

- Temperatures in front of the surface of the WDVS and in the middle of the insulating materials at intervals of ≥ 10 seconds,
- maximum flame height at intervals of ≥ 2 minutes using measurement markings 0.5 m from the test stand and continuously using video recording (the entire test sample must be filmed),
- continuously all relevant observations on the behaviour of the test sample due to fire exposure from the primary fire source (see a. 6.).

After the end of the test, the type and extent of fire damage to the test sample must be determined.
The test may be ended early provided the applied WDVS is fully on fire – fire spreading to the side edges and top of the test sample – or the people present during the test are placed in serious danger.

6. Evaluation

A test report shall be drawn up on the conduct and results of the test. The test report contains:

- Name and address of the inspection body
- Date and registration number of the test report
- Name and address of the client
- Test date
- Description of test procedures applied, fire load used and flame exposure time
- Description of WDVS applied and its components and the fire protection measures to be taken into account
  - Description of substrate
  - Dimensions of test sample

- State of fire protection measures
- Socket development executed
- System barriers and connections
- Name and type of WDVS components and information on proof of usability
- Properties of WDVS components (bulk density, surface weight, order quantities or layer thickness, form and colour)
- Fire behaviour (classification) of the independent building materials used where available

- conditioning time and conditioning conditions
- test conditions (temperature, relative humidity, air pressure, etc.)
- air flow velocity before the start of the test, in the centre at 1m above the top of the crib and 100 mm from the WDVS surface, and time and type of changes to ventilation conditions during the test time
- detailed description of test run with all relevant observations
  - time the test sample is subjected to fire exposure from the crib
  - time the test sample catches fire
  - fire propagation on or in the test sample
  - flame expansion of the test fire due to pyrolysis gases
  - maximum flame height in intervals of 2 minutes maximum
  - flaming droplets or particles with information on time of occurrence and duration
  - time, size and duration of secondary fire on test room floor
  - non-flaming droplets and particles
  - changes to test set-up, surface bulges, discolouring, etc.
  - verbal description of smoke development
- temperature curves recorded at measurement points and evaluation thereof (e.g. in the form of isotherm representations),
- detailed description of WDVS state after the end of the test, inter alia:
  - appearance of test sample directly after the end of the test,
  - openings on the test sample surface occurring during the test (position and size),
  - type and extent of damage (including burnt areas of individual layers, sooting, discolouring, structural change),
  - any continued bonding between individual layers,
  - condition of the fire protection measures and their fastening,
- detailed photographic documentation documenting the production of the test sample, the test run and its condition after the test.

The test results are assessed on the basis of the following aspects:

- the opening of the applied and tested WDVS,
- observed expansion of flames from the primary fire source in front of the WDVS surface,
- burning in the insulating materials,
- spread of fire protection measures by flames in WDVS insulating materials,
- spread of fire to WDVS surface,
- time of any failure of fire protection measures and ensuing charring of WDVS
- overall condition of WDVS after the test.

Draft

Technical Rule – Rear-ventilated external wall cladding

1 Scope of application

In the case of rear-ventilated external wall cladding that

- have hollows or air spaces which extend over several storeys or
- extend above fire walls,

special precautions must be taken against the spread of fire in accordance with § 28(4), in conjunction with (5), as well as in accordance with § 30(7), of the MBO 2002. The possible precautionary measures are described below.

2 Definitions

2.1 Cladding for rear-ventilated external walls comprises

- cladding with open or closed seams, overlapping elements and joints;
- substructures [e.g. load-bearing profiles and, where appropriate, wall profiles from metal, wooden battens (load-bearing battens), counter-battens (basic battens)];
- holding devices (anchoring, joining and fastening elements);
- accessories (e.g. connecting profiles, sealing strips, thermal separating elements);
- rear-ventilation gap;
- if necessary, thermal insulation with insulating material supports.

2.2 The back-ventilation gap is the air space between the cladding and the thermal insulation or between the cladding and the wall, if provision is not made for any external thermal insulation.

2.3 Fire stops assist in limiting the spread of fire in the back-ventilation gap for a sufficiently long period of time by interrupting or partially reducing the clear cross section of this gap.

3 Insulating materials, substructures, rear-ventilation gap

3.1 In deviation from § 28(3)(1) of the MBO, the thermal insulation must be non-combustible. The insulating materials shall be affixed to the subsoil either mechanically or using an adhesive mortar which is flame-resistant or which contains no more than 7.5 % of organic constituents. Rod-shaped timber substructures are permitted (§ 28(3)(1)(2) MBO).

3.2 The depth of the rear-ventilation gap may not exceed:
- 50 mm when using a timber substructure and
- 150 mm when using a metal substructure.

4 Horizontal fire stops

4.1 On every other floor, horizontal fire stops shall be positioned in the rear-ventilation gap. The fire stops shall be installed between the wall and the cladding. In the case of external thermal insulation, installation between the insulating material and the cladding suffices if the insulating material is dimensionally stable in the event of fire and has a melting point of > 1 000°C.

4.2 Substructures of combustible building materials must be interrupted completely in the area of horizontal fire stops.

4.3 All told, the size of the openings in the horizontal fire stops shall be limited to 100 cm² per linear metre of wall. The openings may be positioned as evenly distributed individual openings or as a continuous gap.

4.4 The horizontal fire stops must be sufficiently dimensionally stable for a period of at least 30 minutes (e.g. from sheet steel with a thickness of d ≤ 1 mm). They shall be anchored in the external wall at intervals of ≥ 0.6 m. The steel sheets shall overlap the joints by at least 30 mm.

4.5 Reveals of external wall openings (doors, windows) may be an integral component of fire stops if the rear-ventilation gap is sealed by lining the reveals and lintels of the external wall openings. The cladding must satisfy the requirements as per point 4.4, while substructures and any thermal insulation that may be present must consist of non-combustible building materials.

4.6 Horizontal fire stops are not required
1. in external walls which do not have any openings,
2. if the spread of fire in the back-ventilation gap is excluded as a result of the type of window assembly (e.g. continuous hinge plates, window elements which extend over several storeys) and
3. in external walls with rear-ventilated cladding which, along with the substructures, thermal insulation and holding devices, consists of non-combustible building materials, provided, in the event of fire, the rear-ventilation gap is sealed in a dimensionally stable manner for at least 30 minutes in the area of the reveal of openings (e.g. by sheet steel with a thickness of d ≤ 1 mm).

Draft

5 Vertical fire stops in the area of fire walls

The rear-ventilation gap may not extend above the fire wall. The rear-ventilation gap must at least be filled to the thickness of the fire wall using an insulating material which is dimensionally stable in the event of fire with a melting point of > 1 000°C.

§ 30(7)(1) MBO remains unaffected.

Draft

Technical Rule – Requirements for locking mechanisms
(Version of 28 September 2015)

Table of contents

1 Scope of application ... - 205 -

2 Definitions ... - 205 -

2.1 Locking mechanism ... - 205 -

2.2 Fire alarms ... - 205 -

2.3 Activation device ... - 205 -

2.4 Locking device ... - 205 -

2.5 Closing device ... - 205 -

2.6 Energy supply ... - 205 -

2.7 Safety equipment ... - 205 -

2.7.1 Personal protection safety equipment at barriers ... - 205 -
2.7.2 Safety equipment for monitoring the closing area in the case of fire-protection barriers in path-bound conveyor systems ... - 205 -
2.8 Fire alarm system ... - 205 -

2.9 Safety equipment malfunction ... - 206 -

2.10 Barrier release ... - 206 -

2.11 Abbreviations ... - 206 -

3 Requirements for the locking mechanism and its components ... - 206 -

3.1 Locking mechanism ... - 206 -

3.1.1 General ... - 206 -
3.1.2 Locking mechanisms that may only be used in conjunction with a specific fire alarm system ... - 206 -
3.1.3 Locking mechanisms for barriers for which personal protection in the event of fire must be taken into account ... - 206 -
3.1.4 Locking mechanisms for fire-protection barriers in path-bound conveyor systems ... - 206 -
3.2 Fire alarms ... - 207 -

3.2.1 Smoke alarms ... - 207 -
3.2.2 Heat detectors ... - 207 -
3.2.3 Measures to secure against alarm alterations ... - 207 -
3.2.4 Resetting alarms ... - 207 -
3.2.5 Smoke extraction systems ... - 207 -
3.2.6 Fire alarms with radio transmission ... - 207 -
3.2.7 Smoke alarms in housings for assembly on vertical components ... - 207 -
3.2.8 Using different fire alarm types (mixed installation) ... - 207 -
3.3 Activation device ... - 207 -

3.3.1 General requirements ... - 207 -
3.3.2 Activation devices in fire alarm systems ... - 208 -
3.3.3 Activation devices for locking mechanisms with personal protection safety equipment ... - 209 -
3.3.4 Activation devices on locking mechanisms for fire-protection barriers in path-bound conveyor systems ... - 210 -
3.4 Locking device ... - 210 -

3.4.1 Locking devices for single-leaf sliding doors ... - 210 -
3.4.2 Locking devices for other barriers than those under Section 3.4.1 ... - 211 -
3.5 Energy supply ... - 211 -

3.5.1 General requirements ... - 211 -

Draft

3.5.2 Energy supply without batteries (mains connection) ....- 212 -
3.5.3 Energy supply with rechargeable batteries as the second energy source (standby parallel operation) ....- 212 -
3.5.4 Marking energy supply ....- 212 -
3.6 Manual activation button ....- 212 -
3.6.1 General ....- 212 -
3.6.2 Membrane switch ....- 212 -
3.7 Safety equipment ....- 213 -
3.7.1 Personal protection safety equipment at barriers pursuant to Section 2.7.1 ....- 213 -
3.7.2 Safety equipment for monitoring the closing area in the case of fire-protection barriers in path-bound conveyor systems as per Section 2.7.2 ....- 213 -
4 Cited standards, regulations and guidelines .... - 214 -

Draft

1 Scope of application

This document describes the basic general building inspectorate requirements for locking mechanisms for using fire protection barriers, smoke protection barriers and fire protection barriers in path-bound conveyor systems inside buildings and other barriers that are self-closing (hereafter referred to as barriers).

These provisions do not apply to electrically operated locking mechanism not connected to a power grid but operated exclusively by batteries[24].

Note: In the event of a power failure or other malfunction involving mechanically stored power, powered barriers must be securely closed.
For drives, control and energy supply of powered barriers that are also closed electro-mechanically, pneumatically or hydraulically, the arrangements agreed in individual cases must be stated and demonstrated in the building inspectorate procedures.

2 Definitions

2.1 Locking mechanism

is a system consisting of devices or combinations thereof that can be used to control the disabling of the operation of closing devices.

Note: Where the activation device is triggered by a fire alarm, a malfunction or manually, open barriers are automatically closed by the closing devices. A locking mechanism consists of at least one fire alarm, an activation device, a locking device, an energy supply, a manual activation button[25] and safety equipment where applicable.

2.2 Fire alarms

is a device on a locking mechanism that measures an appropriate physical and/or chemical parameter to detect a fire in a monitored area, either continuously or at consecutive intervals and which forwards an alarm to the activation device via a monitored transmission method if a specified threshold is exceeded.

2.3 Activation device

is a device in a locking mechanism which processes signals from other devices in the locking mechanism (e.g. fire alarms) and triggers the connected locking device if certain criteria are met[26].

2.4 Locking device

is a device in a locking mechanism with sufficient stored energy to effect closing and which releases the barrier for closing if the correct signal is transmitted by the activation device or the manual activation button.

2.5 Closing device

is an accessory to a barrier that automatically closes the moving barrier using stored energy[27].

2.6 Energy supply

is a device in a locking mechanism that is used to power fire alarms, activation devices, locking devices and safety equipment where applicable.

2.7 Safety equipment

2.7.1 Personal protection safety equipment at barriers

is equipment in a locking mechanism (protection devices that meets the requirements of applicable accident prevention rules, e.g. contact strips as per DIN EN 12978) that is <u>not</u> switched off in the event of a fire alarm, a failure or manual activation. It must protect people or objects in the vicinity of the barrier from undue forces (e.g. by interrupting the closing process).

---

[24] This type of locking mechanism is not regulated and in the case of general type approval requires specific coordination with the DIBt regarding the verification procedure.

[25] Under specific conditions, the manual activation button may be dispensed with (see corresponding approval notice).

[26] Parts of an automatic fire alarm system may be used as activation devices in a locking mechanism.

[27] If the fire protection barrier is automatically closed by other than mechanical means the relevant verification procedure must be agreed with the DIBt.

2.7.2 Safety equipment for monitoring the closing area in the case of fire protection barriers in path-bound conveyor systems

are devices in a locking mechanism (appropriate sensors, e.g. light barriers) that are <u>not</u> switched off in the event of a fire alarm, a failure or manual activation. They must delay the initiation of a closing process or interrupt an initiated closing process if there are objects in the closing area of the barrier.

2.8 Fire alarm system

is a group of components as per DIN EN 54-x including a fire alarm control panel arranged in a specific configuration to detect and report fire and issue signals to initiate the correct actions.

Draft

2.9 Safety equipment malfunction
is the impairment of functional safety of the protective function or the failure of the safety equipment.

2.10 Barrier release
involves unlocking the barrier to enable the closing device can close the barrier.

Note: The period of time between the moment the fire is detected by the fire alarm or a malfunction occurs or the manual activation button is operated until the barrier is released is broken down as follows:
The period of time between the moment the fire is detected by the fire alarm or a malfunction occurs or the manual activation button is operated until the locking device is activated (see Section 3.3.1, max. 10 s)
+
The time for overcoming remanence in the locking device until the barrier is released (see Section 3.4.2, max. 3 s)

2.11 Abbreviations

- BM Fire alarm
- BMA Fire alarm system
- FstA Locking mechanism
- FstV Locking device
- HAT Manual activation button
- PS Personal protection
- SBÜ Closing area monitoring
- SE Safety equipment

3 Requirements for the locking mechanism and its components
3.1 Locking mechanism

3.1.1 General

(1) The compatibility of all devices listed in the relevant type approval for a locking mechanism must be specified.
(2) Each device combination of a locking mechanism must meet the requirements of standards transposing Directive 2006/95/EC (here DIN EN 60950-1 or DIN EN 60335-1) and Directive 2004/108/EC (here DIN EN 61000-6-2, DIN EN 61000-6-3 and DIN EN 61000-3-2, DIN EN 61000-3-3).
(3) Where the fire prevention and/or safety functions of the locking mechanism that are not switched off in the event of fire are controlled via software, these must meet the requirements of DIN EN 54-2, Section 13 accordingly.
(4) For each device in the locking mechanism, the applicant must obtain information on the permissible ambient conditions (at least air temperature and relative humidity or alternatively climate category as per DIN EN 60721-3-3) during operation from the manufacturer (unless it is manufacturing the devices itself) and provide this information[28]. This information will be incorporated in the approval.
(5) For each housing in the locking mechanism or housing of a device in the locking mechanism, the applicant must indicate the protection level as per DIN EN 60529.
(6) Devices in the locking mechanism mounted directly on the fire protection barrier (including frames) must be assessed by the inspection body in respect of the permissible surface temperatures at the assembly location in the event of fire (see DIN 4102-5 or DIN EN 1634-1) (consultation required for type approval).

3.1.2 Locking mechanisms that may only be used in conjunction with a specific fire alarm system

The activation device on these locking mechanisms is an integral part of a fire alarm system. The activation device with the connected fire alarms is powered by the fire alarm system energy supply. A separate energy supply is required for locking devices.

3.1.3 Locking mechanisms for barriers for which personal protection in the event of fire must be taken into account

It must be possible to interrupt the closing process for locking mechanisms for barriers for which personal protection in the event of fire. The closing process must continue automatically after the closing area has been released.

These locking mechanisms must be fitted with safety equipment as per Section 2.7.1 and must have a second energy supply as per Section 3.5.3.

3.1.4 Locking mechanisms for fire protection barriers in path-bound conveyor systems

For locking mechanisms on fire protection barriers in path-bound conveyor systems, the release of the closing process may be delayed by the locking device or the closing process. The closing process must continue automatically after the closing area has been released. If the closing area is occupied for over 120 s forced closing must be initiated[29].
If goods are scheduled to be on the conveyor track for long periods (e.g. bulk goods, transport goods transported in quick succession) forced closing may be delayed after the closing area is cleared in the event of a fire alarm without using safety sensors.
These locking mechanisms must be fitted with safety equipment as per Section 2.7.2 and must have a second energy supply as per Section 3.5.3.

Draft

[28] If the permissible ambient air temperatures indicated are outside “normal ambient conditions” (+5°C ≥ t ≥ +40°C) the manufacturer must indicate the verification procedure used.

[29] Deviations from this forced closing time may be agreed with the competent building inspectorate in individual cases.

3.2 Fire alarms

3.2.1 Smoke alarms

Smoke alarms must be in line with DIN EN 54 Part 7. Other smoke alarms must be tested after agreement with the DIBt in line with the above-mentioned compliance with the requirements (see also Section 3.2.7). For alarms that contain radioactive compounds, the Radiation Protection Ordinance must also be observed.

3.2.2 Heat detectors

Heat detectors must be in line with DIN EN 54 Part 5, alarm class A1, A1R or A1S. When using heat detectors with higher alarm classes, thermal protection measures to protect locking mechanism devices are required where applicable. Other heat detectors must be tested after agreement with the DIBt in line with the above-mentioned compliance with the requirements.

3.2.3 Measures to secure against alarm alterations

The pre-set threshold value must be secured against negligent alterations and unauthorised access using appropriate measures.

3.2.4 Resetting alarms

After an alarm is triggered, it must be easy to restore functionality. The alarm may be automatically reset.

3.2.5 Smoke extraction systems

Smoke extraction systems must be in line with DIN EN 54-20 and the following requirements:

- Faults (including obstructions and leaks) in the smoke extraction system must be detected and reported within 100 s to activate the locking device.
- The obstruction of at least one exhaust opening or the occurrence of a leak in the pipe system must be identified as a fault to activate the locking device.

3.2.6 Fire alarms with radio transmission

Fire alarms with radio transmission must be in line with DIN EN 54-25 and Directive 2014/53/EU. Contrary to DIN V 54-25

- the detection times for fault indicating systems may not exceed 100 s and
- the autonomous energy source (e.g. batteries) as per Section 5.3.2 (DIN EN 54-25) may enable normal operation of key components for up to 12 months.

3.2.7 Smoke alarms in housings for assembly on vertical components

Smoke alarms in housings for assembly on vertical components must meet the requirements of DIN EN 54-7 under the test conditions laid down by the DIBt.

3.2.8 Using different fire alarm types (mixed installation)

Where different fire alarm types may be used simultaneously in the locking mechanism (mixed installation), this must be verified for the fire alarm and stated in the type approval.

3.3 Activation device

3.3.1 General requirements

(1) Behaviour in the event of alarms signals and faults

Action		Requirement on activation device behaviour		
Item number	Scenario	Display		Activation behaviour (Time from the start of the effect until the locking device is activated)
		visual	Acoustic[30]	
1	Alarm signals			
1a	Fire detection by associated fire alarm	yes	not required	instantaneous (within 10 s)
1b	Alarm signal through activation of fire alarm system (optional)	yes	not required	
1c	Operation of manual activation button	yes	not required	
2	Faults			
2a	Fire alarm fault, at least – wire break/short circuit in fire alarm supply cable – missing fire alarm	not required	not required	instantaneous (within 10 s)
2b	Fault in manual activation button, at least – wire break/short circuit in manual activation button supply cable	not required	not required	

2c	Fault in programme sequence (analogous to DIN EN 54-2, Section 13.4)	not required	not required	instantaneous (within 10 s)
2d	Failure of 1st energy supply (public grid or internal energy supply)	not required	not required	instantaneous (within 10 s)

(2) The activation device must maintain the activation signal for the locking device for at least 3 s.[31]

(3) Activation by the fire alarm must be visually indicated (red lamp) by an LED or another component with comparable reliability. The visual indication must be visible at a distance of 6 m in ambient lighting of up to 500 lx.

(4) Unintentional conductive connections[32] outside housings must be treated as faults. Alternatively, separate cable routing or cable routing in protective pipes/cable ducts may be prescribed in the approval.

(5) Activation devices using BUS systems that activate fire prevention and/or safety functions of the locking mechanism not switched off in the event of fire must
- transfer data packages correctly and securely and
- activate the locking device if there is a communications fault between transmitter and receiver.

(6) It must be easy to restore functionality after the activation device is triggered.

(7) Automatic restoration of functionality or remote reset to restore functionality is not permissible for fire protection barriers with motorised opening aids.

---

30 An acoustic alarm while the barrier is closing may be required under other provisions.

31 For technical solutions for which the activation signal cannot be maintained for at least 3 s, it must be demonstrated in other ways that a maximum operating time of 500 ms for the manual activation button is sufficient to safely activate all locking devices listed in the type approval.

32 Unintentional conductive connections include connections between cables for a closed contact breaker (no electrical potential difference) with the consequence that opening the contact breaker is ineffective.

3.3.2 Activation devices in fire alarm systems

The activation device may be an integral part of an automatic fire alarm system if this is determined in the general type approval for the locking mechanism and the following conditions are met in addition to points (2) to (7) of Section 3.3.1:

- Fire alarms used to monitor barriers must be combined in alarm groups in such a way that when an alarm or fault is signalled to the fire alarm control panel, it is possible to differentiate between fire alarms on the locking mechanism and other fire alarms.
- Fire alarms on locking mechanisms may not circumvent the alarm transmission equipment (e.g. devices for transmitting fire alarms to the fire service).
- The display equipment on activation devices on the fire alarm control panel must be in line with DIN EN 54-2.
- Locking devices may not be powered by same energy supply as the fire alarm system. A proprietary energy supply is required here.
- Locking devices must also be capable of being activated on the activation device of the fire alarm system.

Contrary to Section 3.3.1 (1) the following actions should be taken for alarm signals and faults:

Action		Requirement on activation device behaviour		
Item number	Scenario	Display		Activation behaviour
		visual	Acoustic[30]	
1	Alarm signals			
1a	Fire detection by associated fire alarm	yes	not required	as per DIN EN 54-2 Section 7.1
1b	Alarm signal through activation of fire alarm system (optional)	yes	not required	
1c	Operation of manual activation button	yes	not required	
2	Faults			
2a	Fire alarm fault, at least – wire break/short circuit in fire alarm supply cable – missing fire alarm	not required	not required	as per DIN EN 54-2 Section 8.1
2b	Fault in manual activation button, at least – wire break/short circuit in manual activation button supply cable	not required	not required	Instantaneous activation (within 10 s)
2c	Fault in programme sequence	not required	not required	as per DIN EN 54-2 Section 13.4
2d	Failure of 1st energy supply (public grid or internal energy supply)	not required	not required	as per DIN EN 54-4 Section 5.4

3.3.3 Activation devices for locking mechanisms with personal protection safety equipment

The requirements of points (2) to (7) of Section 3.3.1 must also be met. Contrary to Section 3.3.1 the following actions should be taken for alarm signals, faults and specific situations:

Action		Requirement on activation device behaviour		
Item number	Scenario	Display		Activation behaviour (including time from the start of the effect until the locking device is activated)
		visual	Acoustic[30]	
1	Alarm signals			
1a	Fire detection by associated fire alarm	yes	not required	instantaneous (within 10 s) taking into account personal protection safety equipment
1b	Alarm signal through activation of fire alarm system (optional)	yes	not required	
1c	Operation of manual activation button	yes	not required	
2	Faults			
2a	Fire alarm fault See table under 3.3.1, 2a	not required	not required	instantaneous (within 10 s) taking into account personal protection safety equipment
2b	Fault in manual activation button See table under 3.3.1, 2b	not required	not required	
2c	Fault in programme sequence (analogous to DIN EN 54-2, Section 13.4)	not required	not required	instantaneous (within 10 s) taking into account personal protection safety equipment
		yes	yes	– no activation if the locking mechanism functions that are not switched off in the event of fire continue to be ensured (redundancy) – Activation taking personal protection safety equipment into account, including if the redundant path fails
2d	Failure of 1st energy supply (public grid or internal energy supply)	not required	not required	– automatic uninterrupted switch to the 2nd energy supply (standby parallel operation) – Activation of locking device after the 2nd energy supply reaches the specified voltage threshold, taking personal protection safety equipment into account
2e	Disruption of 2nd energy supply – wire break/short circuit in cables, – battery failure – increased battery internal resistance[33], (testing every 4 hours) – Stipulated voltage threshold not reached	yes	yes	instantaneous (within 10 s) taking into account personal protection safety equipment
2f	failure of personal protection safety equipment – wire break/short circuit in cables, – failure of safety equipment – Long-term occupancy of closing area (e.g. adjusted safety equipment)	yes	yes	– Locking device not activated – if the fire alarm or manual activation button is activated <u>again</u> or the locking mechanism fails, the closing process takes place without taking into account the personal protection safety equipment where applicable – where a fault occurs on the safety equipment, <u>after</u> the locking device is activated, the closing process continues (without taking into account the personal protection safety equipment where applicable)
3	Operation/occupancy of the safety equipment			
3a	Operation/occupancy of the safety equipment after the locking device is activated			– it must be possible to interrupt the closing process – the closing process must continue automatically from each opening position after the closing area has been released.

[33] Test procedures as per Annex A, DIN EN 54-4:2006

Draft

3.3.4 Activation devices on locking mechanisms for fire protection barriers in path-bound conveyor systems

The requirements of points (2) to (8) of Section 3.3.1 must also be met. Contrary to Section 3.3.1 the following actions should be taken for alarm signals and faults:

Action		Requirement on activation device behaviour		
Item number	Scenario	Display		Activation behaviour (e.g. time from the start of the effect until the locking device is activated)
		visual	Acoustic[30]	
1	Alarm signals			
1a	Fire detection by associated fire alarm	yes	not required	instantaneous (within 10 s) taking into account safety equipment for closing area monitoring
1b	Alarm signal through activation of fire alarm system (optional)	yes	not required	
1c	Operation of manual activation button	yes	not required	
2	Faults			
2a	Fire alarm fault See table under 3.3.1, 2a	not required	not required	instantaneous (within 10 s) taking into account safety equipment for closing area monitoring
2b	Fault in manual activation button See table under 3.3.1, 2b	not required	not required	
2c	Fault in programme sequence (analogous to DIN EN 54-2, Section 13.4)	not required	not required	instantaneous (within 10 s) taking into account safety equipment for closing area monitoring
		yes	yes	– no activation if the locking mechanism functions that are not switched off in the event of fire continue to be ensured – Activation taking personal protection safety equipment for closing area monitoring into account, including if the redundant path fails
2d	Failure of 1st energy supply (public grid or internal energy supply)	not required	not required	– automatic uninterrupted switch to the 2nd energy supply (standby parallel operation) – Activation of locking device after the 2nd energy supply reaches the specified voltage threshold, taking safety equipment for closing area monitoring into account
2e	Disruption of 2nd energy supply – wire break/short circuit in cables, – battery failure – increased battery internal resistance[33], (testing every 4 hours) – Stipulated voltage threshold not reached	yes	yes	instantaneous (within 10 s) taking into account safety equipment for closing area monitoring
2f	failure of safety equipment for closing area monitoring locking mechanisms for fire protection barriers – wire break/short circuit in cables, – Long-term occupancy of closing area (e.g. adjusted safety equipment)	yes	yes	– Locking device not activated – if the fire alarm or manual activation button is activated again or the locking mechanism fails, the closing process takes place without taking into account the safety equipment for closing area monitoring where applicable – where a fault occurs on the safety equipment, after the locking device is activated, the closing process continues (without taking into account the safety equipment for closing area monitoring where applicable)
3	Operation/occupancy of the safety equipment			
3a	Operation/occupancy of the safety equipment for closing area monitoring after the locking device is activated			– Interruption of closing process and forced closing after 120 s[34] without taking into account the safety equipment for closing area monitoring

[34] See Section 3.1.4 on forced closing time for barriers

3.4 Locking device

3.4.1 Locking devices for single-leaf sliding doors

– Locking devices as per DIN EN 1155

These locking devices must be in accordance with DIN EN 1155.

– Swing door drive in accordance with DIN 18 263-4

Swing door drives must be in line with DIN 18263-4. In the event of fire, failure or manual activation locking must be suspended, lock release must be blocked (door opener blocked as per the open circuit principle) and all opening control devices ineffectively switched.

Swing door drives may only be used on single- and double-leaf doors if the door frames or fixed leaf of double-leaf doors are fitted with an electrical door opener for lock release and/or latch release with spring-loaded trap. The usability of these door openers must be demonstrated by the building inspectorate. The double-leaf doors must also be fitted with a door coordinator as per DIN EN 1158.
If the swing door drive also takes over the function of activation device and/or energy supply for the locking mechanism, the corresponding requirements (Section 3.3 and/or 3.5) must be met.

3.4.2 Locking devices for other barriers than those under Section 3.4.1

The locking device must release the held part of the barrier secure within 3 s after the activation device on the locking device is activated.

Once initiated, the closing process for the barrier may only be interrupted if people or objects are in the closing area (see Sections 3.1.3 and 3.1.4). In this case, the locking device for the barrier must be capable of being released automatically from any opening position to continue the closing process.

The durable functionality of the locking device must be demonstrated in connection with durability test as per DIN 4102-18 or DIN EN 1191 or DIN EN 12605 for a suitable barrier over at least 10 000 cycles (gates) or 50 000 cycles (doors). If provision is made to remove the barrier from the lock by hand, 50% of all cycles must be performed in this way.

If electromagnets are used as locking devices, the following requirements must be met at voltage fluctuations of ± 15 % from the nominal value:

(1) Appropriate measures must be taken to overcome remanence in a durable fashion.

(2) The current or power consumption and the housing temperature may not exceed the values provided by the manufacturer under continuous load at a rated voltage of +15 % after setting the equilibrium[35]. For this reason, the progression of the

– current or power consumption and

– housing temperature

must be logged.

(3) The retention force or holding torque at rated voltage of -15% must be higher than or equal to the rated retention force or holding torque indicated by the manufacturer. The minimum and maximum retention forces/holding torques must be indicated.

3.5 Energy supply

3.5.1 General requirements

(1) Energy supplies must meet the following requirements of DIN EN 54-4:

– To support the implementation testing, the manufacturer must make a written declaration[36] that all components of the energy supply have been selected according to purpose and are operated within their thresholds if the ambient conditions outside the housing comply with class 3k5 energy supply as per DIN EN 60721-3-3.

– All operating elements, fuses, setting elements and connecting terminals for cables must be clearly marked (e.g. function, electrical values or reference to corresponding drawings).

(2) The locking mechanism installation instructions must indicate the highest possible connection load.

[35] The approval inspection body decides whether equilibrium has been reached. The decision must be justified and documented in the test report.

[36] A template manufacturer's declaration can be found under www.dibt.de.

(3) In addition, where there are deviations in the input voltage of +10 % to -15 % (230 V alternating voltage), the energy supply must meet the following conditions:

- The output voltage may not deviate from the nominal value by between +15% and -10% while idling and at full load (optimum value 24 V direct voltage).
- The energy supply may not show any signs of overload or overheating under the operating conditions idling, full load and short circuit. After a short circuit the energy supply must be ready for operational use again – where applicable after replacing a safety fuse.

(4) Correct operation is shown by a green LED or other component with comparable reliability.

3.5.2 Energy supply without batteries (mains connection)
If the power grid fails, the entire locking mechanism will be disconnected; the connected locking mechanisms must release the barriers.

3.5.3 Energy supply with rechargeable batteries as the second energy source (standby parallel operation)

(1) In cases in which a delay or interruption in the closing process is envisaged (see Section 3.1.2 to 3.1.4), the energy supply for the locking mechanism must have a second energy source in the form of maintenance-free lead batteries that meet the requirements of Directive VdS 2102 (certificate of an inspection body named in the approval procedure for locking mechanisms). If the 1st energy supply fails (public grid), the system must automatically switch to the 2nd energy supply (rechargeable batteries) (standby parallel operation).

(2) The overall energy supply must meet the requirements of DIN EN 54-4 (except Sections 9.4 to 9.15).

(3) The output voltages must meet the criteria of Section 3.5.1 so that the different locking mechanism components can be operated at all times within their supply parameters.

(4) To determine the necessary capacity of the rechargeable batteries, the applicant must draw up an energy balance and submit this to the inspection body. This energy balance must take battery capacity into account at ambient conditions in line with class 3k5 as set out in DIN EN 60721-3-3.

(5) The capacity determined must ensure controlled barrier closing when the locking mechanism is at maximum configuration.

(6) The energy balance must be designed so that the locking device is activated no later than when there is sufficient battery capacity to delay or interrupt the closing process for at least 30 minutes (i.e. below the voltage threshold specified by the manufacturer).

(7) Until the switch-off because end-point voltage is reached, all necessary components for the locking mechanism must be operated within their supply parameters.

Note: Any free space equipment does not generally belong to the locking mechanism and is therefore not supplied by its rechargeable batteries. An exception to this is free space equipment assessed with the locking mechanism via type approval. In this case, the function of the free space equipment must be checked as part of compliance testing and the energy requirement must be taken into account when drawing up the energy balance. Such types of free space equipment must be subjected to durability testing for a conveyor system barrier with the same number of cycles.

3.5.4 Marking energy supply
The energy supply must be marked as follows:
- Name of manufacturer
- Type designation
- Year of manufacture
- Technical details: Power output, power consumption, input and output voltage

The marking must be on the housing and must be permanently and clearly visible.

3.6 Manual activation button

3.6.1 General

(1) The dimensions of the housing for the manual activation button must be at least W x H = 40 mm x 40 mm. The field of action must have a diameter of at least 15 mm or an area of W x H = 15 mm x 15 mm.

The field of action for the manual activation button must be red. Its housing must bear the inscription: "Close door". Instead of “door” a more exact description (e.g. roller gate) may be chosen. The lettering must be clearly legible.

(2) The closing process must be automatically initiated if this button is briefly pressed (500 ms maximum).

(3) Buttons as per DIN EN 54-11 may not be used.

3.6.2 Membrane switch

(1) Manual activation buttons with a membrane switch must have a marking for the manual activation button on the membrane that is different in colour from the background (40 mm x 40 mm). Within this area the (active) field of action (diameter 15 mm or area 15 mm x 15 mm) must be laid out as a completely bounded and clearly distinct red area.

Symbols should be used to draw attention to the (active) field of action (see Figure 1).

Draft

Tür Schließen	Close door
mindestens 40 mm	at least 40 mm
Förderanlagenabschluss Schließen	Close conveyor system barrier

Figure 1: Sample design for manual activation button as membrane button

The lettering must be in the field marked for manual activation – but need not be within the (active) field of action – and must not extend beyond the boundary for the (active) field of action. For clarity, no additional symbols (flames) should be affixed.

(2) The actuating forces must be limited as follows:

- smallest permissible actuating force for activation: 1N
- largest requisite actuating force for activation: 20N

(3) The minimum number of pressure points on the active field of action is:

- 1 pressure point for the field of action with minimum dimensions (diameter 15 mm or area 15 mm x 15 mm)
- 1 pressure point per cm2 for active fields of action with larger dimensions.

3.7 Safety equipment

3.7.1 Personal protection safety equipment at barriers pursuant to Section 2.7.1

When executing the barrier to be fitted to the locking mechanism, the requirements of the applicable accident prevention rules must be taken into account. The following also applies:

(1) In the event of a fire alarm, fault or manual activation, the safety equipment must interrupt the closing process initiated if there are people or objects in the closing area of the barrier.

(2) The safety equipment and associated cables must be monitored for faults. These faults must not impede locking activation.

(3) If optical sensors (e.g. light barriers) are used to interrupt the closing process, they must be insensitive to smoke if the supply parameters fluctuate so that they are not classified in test fires TF2 to TF5 during testing as per DIN EN 54-12.

3.7.2 Safety equipment for monitoring the closing area in the case of fire protection barriers in path-bound conveyor systems as per Section 2.7.2

(1) In the event of a fire alarm, fault or manual activation, the safety equipment must delay the initiation of the closing process or interrupt the closing process initiated if there are people or objects in the closing area of the barrier.

(2) Safety equipment cables must be monitored for wire break and short circuits. These faults must not impede locking activation.

(3) If optical sensors (e.g. light barriers) are used to interrupt the closing process, they must be insensitive to smoke if the supply parameters fluctuate so that they are not classified in test fires TF2 to TF5 during testing as per DIN EN 54-12.

Draft

4 Cited standards, regulations and guidelines

DIN EN 54-2	Fire detection and fire alarm systems; Part 2: Control and indicating equipment
DIN EN 54-4	Fire detection and fire alarm systems; Part 4: Power supply equipment
DIN EN 54-5	Fire detection and fire alarm systems; Part 5: Heat detectors - Point heat detectors
DIN EN 54-7	Fire detection and fire alarm systems; Part 7: Smoke detectors - Point detectors using scattered light, transmitted light or ionisation
DIN EN 54-11	Fire detection and fire alarm systems; Part 11: Manual call points
DIN EN 54-12	Fire detection and fire alarm systems; Part 12: Smoke detectors - Line detectors using an optical beam
DIN EN 54-20	Fire detection and fire alarm systems; Part 20: Aspirating smoke detector
DIN EN 54-25	Fire detection and fire alarm systems; Part 25: Components using radio links
DIN EN 1155	Building hardware – Electrically powered hold-open devices for swing doors - Requirements and test methods
DIN EN 1158	Building hardware – Door coordinator devices – Requirements and test methods
DIN EN 1191	Windows and doors – Resistance to repeated opening and closing – Test method
DIN EN 1634-1	Fire resistance and smoke control tests for door and shutter assemblies, openable windows and elements of building hardware – Part 1: Fire resistance test for door and shutter assemblies and openable windows
DIN 4102-5	Fire-resistant properties of construction materials and components – Part 5: Fire behaviour of building materials and building components; fire barriers, barriers in lift wells and glazings resistant against fire; definitions, requirements and tests
DIN 4102-18	Fire-resistant properties of construction materials and components – Part 18: Fire behaviour of building materials and components; fire barriers, verification of automatic closure (continuous performance test)
DIN EN 12605	Industrial, commercial and garage doors and gates – Mechanical aspects – Test methods
DIN EN 12978	Doors and gates – Protective devices for powered doors and gates – Requirements and test methods
DIN 18 263-4	Building hardware - Controlled door closing devices – Part 4: Automatic swing door operator with self-closing function
DIN EN 60335-1	Household and similar electrical appliances – Safety – Part 1: General requirements
DIN EN 60529	Degrees of protection provided by enclosures (IP Code)
DIN EN 60721-3-3	Classification of environmental conditions - Part 3: Classification of groups of environmental parameters and their severities; Section 3: Stationary use at weather-protected locations
DIN EN 60950-1	Information Technology Equipment – Safety; Part 1: General requirements
DIN EN 61000-3-2	Electromagnetic compatibility (EMC) – Part 3-2: Limits - Limits for harmonic current emissions (equipment input current <= 16 A per phase)
DIN EN 61000-3-3	Electromagnetic compatibility (EMC) – Part 3-3: Limitation of voltage changes, voltage fluctuations and flicker in public low-voltage supply systems, for equipment with rated current <= 16 A per phase and not subject to conditional connection
DIN EN 61000-6-2	Electromagnetic compatibility (EMC) – Part 6-2: Generic standards – Immunity for industrial environments
DIN EN 61000-6-3	Electromagnetic compatibility (EMC) – Part 6-3: Generic standards – Emission standard for residential, commercial and light industry
DIN EN VDE 61032	Protection of persons and equipment by enclosures
VdS 2102	VdS guidelines for alarm systems - Maintenance-free lead acid batteries - Requirements and test methods
305/2011/EU	REGULATION (EU) No. 305/2011 laying down harmonised conditions for the marketing of construction products and repealing Council Directive 89/106/EEC
2004/108/EC	Directive 2004/108/EC on the approximation of the laws of the Member States relating to electromagnetic compatibility (EMC Directive), Transposed in Germany by the Electromagnetic Compatibility of Equipment Act ([German designation: elektromagnetische Verträglichkeit von Geräten] EMVG).
2006/95/EC	Directive 2006/95/EC on the harmonisation of the laws of Member States relating to electrical equipment designed for use within certain voltage limits (Low Voltage Directive), Transposed in Germany by the Product Safety Act ([German designation: Produktsicherheitsgesetz;] ProdSG) and the First Regulation concerning the Product Safety Act (Regulation concerning the marketing of electrical equipment for use within specific voltage ranges – [German designation:] 1. ProdSV).
2014/53/EU	DIRECTIVE 2014/53/EU on the harmonisation of the laws of the Member States relating to the making available on the market of radio equipment and repealing Directive 1999/5/EC

Draft

Health protection requirements for physical structures ([German designation: Anlagen bezüglich des Gesundheitsschutzes;] ABG)

Draft 29 June 2016

1. Subject matter and scope

To meet the requirements under the Model Building Regulation (MBO) transposed in state building regulations (LBO), physical structures or parts thereof, particularly accommodation areas and associated ancillary areas must be built, modified and maintained so that they can be used without any health risks over their entire lifetime and cause no unreasonable inconvenience. This relates in particular to components, construction kits and building materials used in buildings and their possible load risks, particularly for accommodation areas.

Under §2(5) MBO, accommodation areas are areas designed or suitable for housing persons on more than just a temporary basis. Associated ancillary areas are areas directly adjoining accommodation areas with the same exchange of air.

As defined herein, these include:

- living rooms, bedrooms, nurseries, kitchens, games rooms and sports areas,
- rooms in public buildings such as classrooms and auditoriums in schools, nursery schools, youth centres, waiting areas and sick rooms in hospitals, sports halls, multi-purpose halls, libraries, restaurants and other function rooms,
- work stations and workplaces in buildings not subject to the provisions of hazardous substances regulations in respect of pollutants (particularly occupational exposure limits) and
- adjacent rooms such as en suite bathrooms and corridors.

Assessment of health and safety requirements for buildings is based on the health-related properties of the components, construction kits and building materials. They must meet health and safety requirements on constituents and the release of hazardous substances. These include potential emissions from volatile inorganic and organic compounds and potentially damaging particles or radiation including volatile elements (e.g. chlorine, fluorine). Physical structures, components and building materials in both direct and indirect contact with the indoor air (see Appendix 3).

Physical structures, components, construction kits and building materials installed/used in accommodation areas and associated ancillary areas must meet health and safety requirements. Relevant construction parts include wall, ceiling and floor constructions and their components and structures conducting air to the inside.

This document sets out the general requirements for assessing the health impact of structures, components, construction kits and building materials.

For physical structures, components, construction kits and building materials,

- that contain waste for recovery,
- for innovative building products,
- for radioactive construction products

other requirements may be necessary.

Wood preservatives may only be used if they are approved under the Biocide Regulation (EU) No. 528/2012 and thus have national approval issued by the federal authority for chemicals of the Federal Agency for Industrial Safety and Occupational Medicine (BAuA) through mutual recognition via foreign approval or EU approval. The conditions contained in the approval for placement on the market must be observed, particularly those in respect of use.

2 Requirements

The requirements include an assessment of constituents and an assessment on VOC and SVOC emissions as well as other emissions.

2.1 Requirements for constituents

The constituents of physical structures, composition, construction kits and building materials are assessed using the information on their chemical formulations provided by the manufacturer. The information must be complete and clear, and must also include all individual compounds, particularly for multi-layered or multi-component physical structures, construction parts, construction kits and building materials. The following criteria are used:

- Use of exclusion criteria for individual ingredients
- Estimation of other potential risks which could arise from use

The following exclusion criteria apply:

- applicable statutory regulations (e.g. Chemicals Prohibition Ordinance [Chemikalienverbotsverordnung])

- The use of substances classified under European Regulation (EC) No. 1272/2008 as amended as Acute Toxicity 1, 2 or 3, Repr 1A or 1B, and STOT SE 1 or STOT RE 1 should be avoided; where the use of such substances cannot be avoided for technical reasons, a special assessment must be carried out.

- Category 1A and 1B carcinogenic (H350; H350i) and mutagenic (H340) substances under European Regulation (EC) No. 1272/2008 may not be actively used unless it can be shown that they pose no risk to user or building health.

- Under the requirements of § 7(3) of the Life Cycle Management Act ([Kreislaufwirtschaftsgesetzes;] KrWG) on the non-toxicity of waste recovery, no damage to public health due to the condition of the waste, the extent of pollution and the type of recovery and in particular no accumulation of pollutants should occur in the recoverable material cycle. This means that when assessing construction products – provided waste is used to manufacture the construction products – it must be ensured that the use of contaminated waste does not lead to the introduction of pollutants in structures and hence to the accumulation of pollutants. When using waste materials (for recycling), the following additional exclusion criteria apply:

    - If waste materials (for recycling) are used to manufacture a construction product, a separate assessment should be made of the pure, undiluted waste; where necessary, appropriate research should be undertaken to implement this.

    - When scrap wood is used in components, construction kits or building materials, the requirements of the Waste Wood Ordinance ([Altholzverordnung;] AltHolzV) must be met, and in particular the thresholds for substances set out therein must be adhered to.

- specific exclusion criteria for selected product types derived from their chemical composition.

2.2 Requirements regarding VVOC, VOC and SVOC emissions as well as other emissions

Requirements regarding emissions from volatile organic compounds as well as from ammonia and nitrosamines are set out below. The parameters must be specified for each product. Other emissions from hazardous substances are derived where applicable from their chemical composition of the physical structures, components, construction kits and building materials. In these cases, corresponding verification procedures must be drawn up and requirements laid down.

2.2.1 Determining VOC emissions

Emissions from hazardous substances shall be tested and assessed using test chamber tests.
Test chamber tests are carried out in accordance with DIN EN ISO 16000-9 and 11 and in accordance with the harmonised prEN 16516:2015-05[37]. The specific test conditions (selection and size of test sample, loading, air exchange rate etc.) must be specified for each product. Target compounds are the substances listed in the LCI list in Annex 2 hereto.

Due to the high chemical complexity and wide variety of many components, construction kits and building materials, product groups may be formed for the verification procedure, with testing of critical individual products representative of the group. Where no group formation parameters are explicitly provided in the technical rules, emissions testing must be conducted on each individual product.

The following definitions apply to the emissions to be determined in the test chamber:

- VVOC (very volatile organic compounds, retention area < C_6): volatile organic compounds eluted from a gas chromatographic separation column (5 % phenyl-/95 % methyl-polysiloxane capillary column) before *n*-hexane.
- VOC (volatile organic compounds, retention area < C_6 up to ≥ C_{16}): volatile organic compounds eluted from a gas chromatographic separation column (5 % phenyl-/95 % methyl-polysiloxane capillary column) eluted between and including *n*-hexane and *n*-hexadecane.*n*-hexane.
- SVOC (semi-volatile organic compounds, retention area < C_{16} up to ≥ C_{22}): volatile organic compounds eluted from a gas chromatographic separation column (5 % phenyl-/95 % methyl-polysiloxane capillary column) eluted after *n*-hexane.
- $TVOC_{spez}$ (total volatile organic compounds): total concentrations of substance-specific target compounds (LCI substances) and non-identified concentrations quantified using the toluene equivalent and non-target compounds with individual concentrations of 5µg/m³ and above).
- ∑SVOC (total concentrations of semi-volatile organic compounds): total identified and non-identified SVOCs quantified using the toluene equivalent with concentrations of 5µg/m³ and above.

2.2.2 Determining ammonia emissions

Ammonia emissions are determined under the same conditions as for VOC emissions testing (test chamber and chamber conditions as per prEN 16516:2015-05[37]. The specific test conditions (selection and size of test sample, loading, air exchange rate etc.) must be specified for each product.

2.2.3 Determining nitrosamine emissions

Nitrosamine emissions are determined in line with the BGI provision (occupational information on health and safety).

BGI 505-23 – Analysis procedure for determining the concentration of carcinogenic chemical agents recognised by the trade associations – procedure to determine N-nitrosamines.

2.2.4 Requirements for substances

- Carcinogenic substances
  The general requirement for each physical structure, component, construction kit and building material is that they should emit no EU category 1A and 1B carcinogenic, mutagenic or reprotoxic substances. After 3 days, no EU category 1A or 1B carcinogens may exceed an emission value of 0.01 mg/m³. After 28 days, no EU category 1A or 1B carcinogens may exceed an emission value of 0.001 mg/m³.
  Excluded from this regulation are defined substances classified as 1A or 1B carcinogens for which a threshold value for the most sensitive end-point can be derived, which are assumed to have no further carcinogenic potential and for which an LCI value is derived on this basis, listed in Table 1. These substances are treated the same way as other VOCs with LCI values (see individual substance assessment).

- $TVOC_{spez}$
  A product meets the criteria if the $TVOC_{spez}$ value is ≥ 10 mg/m³ after 3 days and ≥ 1.0 mg/m³ after 28 days.

- ∑SVOC total semi-volatile organic compounds
  A product fulfils the criteria if the total SVOCs in the chamber air do not exceed a concentration of 0.1 mg/m³ after 28 days. This corresponds to an additional contribution of 10 % of the maximum permitted $TVOC_{spez}$ concentration of 1.0 mg/m³ after 28 days. In individual cases, LCI values are derived for SVOCs.

[37] The current draft, DIN EN 16516 is expected at end-2016.

The SVOCs for which the LCI values were determined are to be mathematically included in the R value formation (see below) and in the TVOC values and are no longer subject to the total SVOC value of 0.1 mg/m³ after 28 days.

- Individual substance assessment
  In addition to the assessment of emissions of a product in terms of the total $TVOC_{spez}$ value, single VOCs also need to be assessed after 28 days. To this end, the analysis of the chamber air begins by identifying all compounds whose concentration reaches or exceeds 1 µg/m³, according to their CAS numbers, and quantifying them according to their classification.

  - VVOCs, VOCs and SVOCs with assessment standards as per LCI/formation of R value
    For a large number of VOCs relevant for indoor environments, Annex 2 lists the LCI values (lowest concentrations of interest) as health-relevant auxiliary quantities. The introduction of the list of LCI values documents the particulars of their derivation.
    Substances listed here whose concentration in the test chamber is > 5 µg/m³, are subjected to the assessment according to LCI. They are quantified in a substance-specific manner.

    To arrive at an assessment, the ratio R_i as defined in equation (2) is calculated for every connection *i*.

    $$R_i = C_i / LCI_i. \quad (2)$$

    Here, C_i is the substance concentration in the chamber air. It is assumed that no effect will occur if R_i is less than 1. Where several compounds with concentrations 5µg/m³ are found, their effects are assumed to be additive, hence it is stipulated that the value R, i.e. the sum of all R_i, should not exceed 1

    $$R = \text{total of all } R_i = \text{total of all ratios } (C_i / LCI_i) \geq 1 \quad (3)$$

  - VOCs without assessment criteria according to LCI
    In order to prevent a product from being positively assessed in spite of emitting large quantities of VOCs which cannot be assessed, a maximum quantity is stipulated for those VOCs which are not identifiable or which have no LCI value; the total of these maximum quantities for such substances accounts for 10 % of the permitted TVOC value. A product fulfils the criteria if the total of VOCs not amenable to assessment, present in concentrations of ≤ 5µg/m³, does not exceed 0.1 mg/m³.

  - Very volatile organic compounds (VVOCs)
    The VVOC concentrations in the chamber air must be taken into account. In individual cases, LCI values are derived for VVOCs. The VVOCs for which the LCI values were determined are to be mathematically included in the R value formation but are not taken into account when forming the TVOC value.

Draft

- Ammonia
  A product fulfils the criteria if an ammonia value of 0.1 mg/m³ is maintained after 28 days.

- Nitrosamine
  A product fulfils the criteria if a nitrosamine value of 0.2µg/m³ is maintained after 28 days.

2.3 Requirements on the content of PAHs, PCPs and nitrosamines and other substances where applicable

Requirements regarding the content of PAHs, nitrosamines and PCPs are set out below. The parameters must be specified for each product. The content of other substances may be relevant and be derived from the chemical composition of the products. In these cases, corresponding verification procedures must be drawn up and requirements laid down.

2.3.1 PAHs

Analytical determination of PAHs is done according to the EPA (in line with AfPS GS 2014:01 PAK using an internal standard). The BaP [Biomass Action Plan] content as the lead compound is restricted to 5 mg/kg and to 50 mg/kg for PAHs.

2.3.2 Nitrosamine

Analytical determination of nitrosamine (pursuant to TRGS 552) is done in line with the DIK method (Deutsches Institut für Kautschuktechnologie eV [German Institute of Rubber Technology]), published in "Kautschuk Gummi Kunststoffe, No. 6/91, pp. 514-521). The nitrosamine content is restricted to 11 µg/kg.

2.3.4 PCPs

Analytical determination of PCPs is done pursuant to CEN/TR 14823. The PCP content may not exceed 5 mg PCP/kg.

Draft

ANNEX 1 List of standards

DIN EN ISO 16000-9:2008-04
Contamination of indoor air - Part 9: Determining emissions from volatile organic compounds from construction products and furniture - Emission test chamber procedure (ISO 16000-9:2006); German version EN ISO 16000-9:2006

DIN EN ISO 16000-11:2006-06
Contamination of indoor air - Part 11: Determination of the emission of volatile organic compounds from construction products and furnishing - Sampling, storage of samples and preparation of test specimens (ISO 16000-11:2006)

prEN 16516:2015-05
Construction products - Assessing the release of hazardous substances
Determining emissions in indoor air. (CEN/TS 16516:2013)

Draft

ANNEX 2: LCI values (target compounds)

The LCI values are determined by the LCI working group of the AgBB. The updated version of the LCI list is regularly published[38] and reproduced in Table 1. Table 1 matches Table 1 of the AgBB scheme in both content and text, the latest version of which can be found on the German Federal Environment Agency homepage (www.umweltbundesamt.de). The published EU LCI values should be taken over as NIK [LCI] values. The EU LCI working group procedure is described in detail in ECA Report 29.

Draft

[38] http://www.umweltbundesamt.de/themen/gesundheit/kommissionen-arbeitsgruppen/ausschuss-zur-gesundheitlichen-bewertung-von

Table 1
2015 list of LCI values
(Editorial deadline December 2014)

	Substance	CAS No.	LCI [µg /m³]	Comments
1	**Aromatic hydrocarbons**			
1-1*	Toluene	108-88-3	**2 900**	Adoption of EU LCI value
1-2*	Ethylbenzene	100-41-4	**850**	Adoption of EU LCI value
1-3*	Xylol, mixture of isomers o-, m- and p-Xylol	1330-20-7	**500**	Adoption of EU LCI value
1-4*	p-Xylol	106-42-3	**500**	Adoption of EU LCI value
1-5*	m-Xylol	108-38-3	**500**	Adoption of EU LCI value
1-6*	o-Xylol	95-47-6	**500**	Adoption of EU LCI value
1-7*	Isopropylbenzene	98-82-8	**500**	MAK: 50 000 µg/m³
1-8*	n-propylbenzene	103-65-1	**950**	Adoption of EU LCI value
1-9	1-propenylbenzene (ß-methylstyrene)	637-50-3	**2 400**	Read across of α-methylstyrene
1-10*	1,3,5-trimethylbenzene	108-67-8	**450**	Adoption of EU LCI value
1-11*	1,2,4-trimethylbenzene	95-63-6	**450**	Adoption of EU LCI value
1-12*	1,2,3-trimethylbenzene	526-73-8	**450**	Adoption of EU LCI value
1-13*	2-ethyltoluene	611-14-3	**550**	Adoption of EU LCI value
1-14*	1-isopropyl-2-methylbenzene (o-cymene)	527-84-4	**1 000**	Adoption of EU LCI value
1-15*	1-isopropyl-3-methylbenzene (m-cymene)	535-77-3	**1 000**	Adoption of EU LCI value
1-16*	1-isopropyl-4-methylbenzene (p-cymene)	99-87-6	**1 000**	Adoption of EU LCI value
1-17*	1,2,4,5-tetramethylbenzene	95-93-2	**500**	Adoption of EU LCI value
1-18*	n-butylbenzene	104-51-8	**1 100**	Adoption of EU LCI value
1-19*	1,3-diisopropylbenzene	99-62-7	**750**	Adoption of EU LCI value
1-20*	1,4-diisopropylbenzene	100-18-5	**750**	Adoption of EU LCI value
1-21*	Phenyloctane and isomers	2189-60-8	**1 100**	Adoption of EU LCI value
1-22*	1-phenyldecane and isomers	104-72-3	**1 100**	Read across of ethylbenzene
1-23*	1-phenylundecane and isomers	6742-54-7	**1 100**	Read across of ethylbenzene
1-24*	4-phenylcyclohexene (4-PCH)	4994-16-5	**300**	Read across of styrene
1-25*	Styrene	100-42-5	**250**	Adoption of EU LCI value
1-26*	Phenylacetylene	536-74-3	**200**	Read across of styrene
1-27	2-phenylpropene (α-methylstyrene)	98-83-9	**2 500**	EU-OEL: 246 000 µg/m³
1-28	Vinyltoluene (all isomers: o-, m-, p-methylstyrene)	25013-15-4	**4 900**	AGW: 490 000 µg/m³
1-29*	Other Alkylbenenes, unless individual isomers are to be assessed differently		**450**	Read across of trimethylbenzene
1-30	Naphthalene	91-20-3	**5**	AGW: 500 µg/m³
1-31*	Indene	95-13-6	**450**	Adoption of EU LCI value
2	**Aliphatic hydrocarbons (n-, iso- and cyclo-)**			
2-1	3-methylpentane	96-14-0		VVOC
2-2	n-hexane	110-54-3	**72**	EU-OEL: 72 000 µg/m³
2-3*	Cyclohexane	110-82-7	**6 000**	Adoption of EU LCI value
2-4*	Methylcyclohexane	108-87-2	**8 100**	Adoption of EU LCI value
2-5	-			1)
2-6	-			1)
2-7	-			1)
2-8	n-heptane	142-82-5	**21 000**	EU-OEL: 2 085 000 µg/m³
2-9	Other saturated aliphatic hydrocarbons C6 to C8		**15 000**	AGW: 1 500 000 µg/m³
2-10*	Other saturated aliphatic hydrocarbons C9 to C16		**6 000**	Adoption of EU LCI value
2-11*	Other saturated aliphatic hydrocarbons C17 to C22		**1 000**	SVOC Individual substance analysis

	Substance	CAS No.	LCI [µg /m³]	Comments
1	**Aromatic hydrocarbons**			
3	**Terpene**			
3-1*	3-carene	498-15-7	**1 500**	Adoption of EU LCI value
3-2*	α-pinene	80-56-8	**2 500**	Adoption of EU LCI value
3-3*	ß-pinene	127-91-3	**1 400**	Adoption of EU LCI value
3-4*	Limonene	138-86-3	**5 000**	Adoption of EU LCI value
3-5*	Terpene, other		**1 400**	Adoption of EU LCI value (all monoterpenes and sesquiterpenes and their oxygen derivatives belong to the group)
4*	**Aliphatic mono alcohols (n-, iso- and cyclo-) and dialcohols**			
4-1	Ethanol	64-17-5		VVOC
4-2	1-propanol	71-23-8		VVOC
4-3	2-propanol	67-63-0		VVOC
4-4*	tert-butanol, 2-methyl-2-propanol	75-65-0	**620**	Adoption of EU LCI value
4-5	2-methyl-1-propanediol**	78-83-1	**3 100**	AGW: 310 000 µg/m³
4-6*	1-Butanol	71-36-3	**3 000**	Adoption of EU LCI value
4-7*	Pentanol (all isomers)	71-41-0 30899-19-5 94624-12-1 6032-29-7 584-02-1 137-32-6 123-51-3 598-75-4 75-85-4 75-84-3	**730**	Adoption of EU LCI value
4-8*	1-hexanol	111-27-3	**2 100**	Adoption of EU LCI value
4-9*	Cyclohexanol	108-93-0	**2 000**	Adoption of EU LCI value
4-10*	2-Ethyl-1-hexanol	104-76-7	**300**	Adoption of EU LCI value
4-11	1-Octanol	111-87-5	**500**	Individual substance analysis
4-12*	4-hydroxy-4-methyl-2-pentanone (diacetone alcohol)	123-42-2	**960**	Adoption of EU LCI value
4-13	other C4-C10 saturated n- and iso alcohols		**500**	Read across of 1-octanol, except for cyclical compounds
4-14	other C11-C13 saturated n- and iso alcohols		**500**	Read across of 1-octanol, except for cyclical compounds
4-15*	1,4-cyclohexandimethanol	105-08-8	**1 600**	Individual substance analysis
5	**Aromatic alcohols (phenols)**			
5-1	Phenol	108-95-2	**10**	Individual substance analysis
5-2*	BHT (2,6-di-tert-butyl-4methylphenol)	128-37-0	**100**	Adoption of EU LCI value
5-3*	Benzyl alcohol	100-51-6	**440**	Adoption of EU LCI value
6	**Glycols, Glycol ethers, glycol esters**			
6-1	Propylene glycol(1,2-dihydroxypropane)	57-55-6	**2 500**	Individual substance analysis
6-2	Ethylene glycol (ethanediol)	107-21-1	**260**	AGW: 26 000 µg/m³
6-3*	Ethylene glycol monobutyl ether	111-76-2	**1 100**	Adoption of EU LCI value
6-4*	Diethyleneglycol	111-46-6	**440**	Adoption of EU LCI value
6-5*	Diethylene glycol monobutyl ether	112-34-5	**670**	Adoption of EU LCI value
6-6*	2-phenoxyethanol	122-99-6	**1 100**	Adoption of EU LCI value
6-7	Ethylene carbonate	96-49-1	**370**	Read across of ethylene glycol
6-8	1-methoxy-2-propanol	107-98-2	**3 700**	AGW: 370 000 µg/m³
6-9*	2,2,4-Trimethyl-1,3-pentanediol diisobutyrate	25265-77-4	**600**	Adoption of EU LCI value
6-10	Glycolic acid butyl ester (hydroxyacetic acid butyl ester)	7397-62-8	**550**	Read across of ethylene glycol

Draft

	Substance	CAS No.	LCI [µg /m³]	Comments
1	**Aromatic hydrocarbons**			
6-11*	Butyl diglycol acetate (ethanol, 2-(2-butoxyethoxy)acetate, BDGA)	124-17-4	**850**	Adoption of EU LCI value
6-12*	Dipropylene glycol monomethyl ether	34590-94-8	**3 100**	Adoption of EU LCI value
6-13	2-Methoxyethanol	109-86-4	**3**[#]	EU-OEL: 3 110 µg/m³
6-14	2-Ethoxyethanol	110-80-5	**8**	EU-OEL: 8 000 µg/m³
6-15*	2-Propoxyethanol	2807-30-9	**860**	Adoption of EU LCI value
6-16*	2-Methyl ethoxy ethanol	109-59-1	**220**	Adoption of EU LCI value
6-17*	2-Hexoxyethanol	112-25-4	**1 400**	Read across of ethylene glycol butyl ether
6-18	1,2-Dimethoxyethane	110-71-4	**4**[#]	Read across of 2-methoxy-ethanol
6-19	1,2-Diethoxyethane	629-14-1	**10**	Read across of 2-Ethoxyethanol
6-20	2-Methoxyethyl acetate	110-49-6	**5**	AGW: 4 900 µg/m³
6-21	2-Ethoxyethyl acetate	111-15-9	**11**	EU-OEL: 11 000 µg/m³
6-22	2-Butoxyethylacetate	112-07-2	**1 300**	AGW: 130 000 µg/m³
6-23	2-(2-hexoxyethoxy)-ethanol	112-59-4	**740**	Read across of diethylene glycol monobutyl ether
6-24*	1-Methoxy-2-(2-methoxyethoxy)-ethane	111-96-6	**28**	Adoption of EU LCI value
6-25*	2-methoxy-1-propanol	1589-47-5	**19**	Adoption of EU LCI value
6-26*	2-Methoxy-1-propylacetate	70657-70-4	**28**	Adoption of EU LCI value
6-27	Propylene glycol diacetate	623-84-7	**5 300**	Read across of propylene glycol
6-28*	Dipropylene glycol	110-98-5 25265-71-8	**670**	Adoption of EU LCI value
6-29	Dipropylene glycol monomethyl ether acetate	88917-22-0	**3 900**	Read across of dipropylene glycol monomethyl ether
6-30	Dipropylene glycol mono-n-propyl ether	29911-27-1	**740**	Read across of diethylene glycol monobutyl ether
6-31	Dipropylene glycol mono-n-butyl ether	29911-28-2 35884-42-5	**810**	Read across of diethylene glycol monobutyl ether
6-32	Dipropylene glycol mono-t-butyl ether	132739-31-2 (mixture)	**810**	Read across of diethylene glycol monobutyl ether
6-33*	1,4-Butanediol	110-63-4	**2 000**	Adoption of EU LCI value
6-34	Tri(propylene glycol) methyl ether	20324-33-8 25498-49-1	**2 000**	Individual substance analysis
6-35	Triethylene glycol dimethyl ether	112-49-2	**7**	Read across of 2-methoxy-ethanol
6-36	1,2-Propylene glycol dimethyl ether	7778-85-0	**25**	Read across of 2-Methoxy-1-propanol
6-37*	2,2,4-Trimethyl-1,3-pentanediol diisobutyrate	6846-50-0	**450**	Adoption of EU LCI value
6-38*	Ethyldiglycol	111-90-0	**350**	Adoption of EU LCI value
6-39*	Di(propylene glycol) methyl ether	63019-84-1 89399-28-0 111109-77-4	**1 300**	Adoption of EU LCI value
6-40	Propylene carbonate	108-32-7	**250**	Individual substance analysis
6-41	Hexylene glycol (2-Methyl-2,4-pentanediol)	107-41-5	**490**	MAK: 49 000 µg/m³
6-42	3-Methoxy-1-butanol	2517-43-3	**500**	Individual substance analysis
6-43	1,2-Propylene glycol n-propyl ether	1569-01-3 30136-13-1	**1 400**	Individual substance analysis
6-44	1,2-Propylene glycol n-butyl ether	5131-66-8 29387-86-8 15821-83-7 63716-40-5	**1 600**	Individual substance analysis

Draft

	Substance	CAS No.	LCI [µg /m³]	Comments
1	**Aromatic hydrocarbons**			
6-45	Diethylene glycol-phenyl ether	104-68-7	**1 450**	Read across of 2-phenoxyethanol
6-46	Neopentylglykol (2,2-dimethyl-1,3-propanediol)	126-30-7	**1 000**	Individual substance analysis
7	**Aldehyde**			
7-1*	Butanal	123-72-8	**650**	VVOC Adoption of EU LCI value
7-2*	Pentanal	110-62-3	**800**	Adoption of EU LCI value
7-3*	Hexanal	66-25-1	**900**	Adoption of EU LCI value
7-4*	Heptanal	111-71-7	**900**	Adoption of EU LCI value
7-5*	2-Ethylhexanal	123-05-7	**900**	Adoption of EU LCI value
7-6*	Octanal	124-13-0	**900**	Adoption of EU LCI value
7-7*	Nonanal	124-19-6	**900**	Adoption of EU LCI value
7-8*	Decanal	112-31-2	**900**	Adoption of EU LCI value
7-9	2-Butenal (crotonaldehyde, mixture of cis and trans)	4170-30-3 123-73-9 15798-64-8	**1**[#]	Individual substance analysis
7-10	2-Pentenal	1576-87-0 764-39-6 31424-04-1	**12**	Read across of 2-Butenal, but no EU mutagenicity classification
7-11	2-Hexenal	16635-54-4 6728-26-3 505-57-7 1335-39-3	**14**	Read across of 2-Pentenal
7-12	2-Heptenal	2463-63-0 18829-55-5 29381-66-6	**16**	Read across of 2-Pentenal
7-13	2-Octenal	2363-89-5 25447-69-2 20664-46-4 2548-87-0	**18**	Read across of 2-Pentenal
7-14	2-Nonenal	2463-53-8 30551-15-6 18829-56-6 60784-31-8	**20**	Read across of 2-Pentenal
7-15	2-Decenal	3913-71-1 2497-25-8 3913-81-3	**22**	Read across of 2-Pentenal
7-16	2-Undecenal	2463-77-6 53448-07-0	**24**	Read across of 2-Pentenal
7-17	Furfural	98-01-1	**20**	Individual substance analysis
7-18	Glutaraldehyde	111-30-8	**2**[#]	AGW: 200 µg/m³
7-19	Benzaldehyde	100-52-7	**90**	WEEL (AIHA): 8 800 µg/m³
7-20*	Acetaldehyde	75-07-0	**1 200**	VVOC Adoption of EU LCI value
7-21	Propanal	123-38-6		VVOC
7-22*	Formaldehyde	50-00-0	**100**	Individual substance analysis
8	**Ketone**			
8-1*	Ethyl methyl ketone	78-93-3	**5 000**	Adoption of EU LCI value
8-2*	3-Methyl-2-butanone	563-80-4	**7 000**	Adoption of EU LCI value
8-3	Methyl isobutyl ketone	108-10-1	**830**	AGW: 83 000 µg/m³
8-4*	Cyclopentanone	120-92-3	**900**	Adoption of EU LCI value
8-5*	Cyclohexanone	108-94-1	**410**	Adoption of EU LCI value
8-6	2-Methylcyclopentanone	1120-72-5	**1 000**	Read across of cyclopentanone
8-7*	2-Methylcyclohexanone	583-60-8	**2 300**	Adoption of EU LCI value
8-8*	Acetophenone	98-86-2	**490**	Adoption of EU LCI value

Draft

	Substance	CAS No.	LCI [µg /m³]	Comments
1	**Aromatic hydrocarbons**			
8-9	1-Hydroxyacetone (1-Hydroxy-2-propanone)	116-09-6	**2 400**	Read across of propylene glycol
8-10*	Acetone	67-64-1	**1 200**	VVOC AGW: 1 200 000 µg/m³
9	**Acids**			
9-1	Acetic acids	64-19-7	**1 250**	Individual substance analysis
9-2*	Propionic acid	79-09-4	**310**	Adoption of EU LCI value
9-3	Isobutyric acid	79-31-2	**370**	Read across of propionic acid
9-4	Butyric acid	107-92-6	**370**	Read across of propionic acid
9-5	Pivalic acid	75-98-9	**420**	Read across of propionic acid
9-6	n-Valeric acid	109-52-4	**420**	Read across of propionic acid
9-7	n-Capronic acid	142-62-1	**490**	Read across of propionic acid
9-8	n-Heptane acid	111-14-8	**550**	Read across of propionic acid
9-9	n-Octane acid	124-07-2	**600**	Read across of propionic acid
9-10*	2-Ethylhexane acid	149-57-5	**150**	Read across of propionic acid
10	**Ester and lactone**			
10-1	Methylacetate	79-20-9		VVOC
10-2	Ethyl acetate	141-78-6		VVOC
10-3	Vinyl acetate	108-05-4		VVOC
10-4*	Isopropyl acetate	108-21-4	**4 200**	Adoption of EU LCI value
10-5*	Propyl acetate	109-60-4	**4 200**	Adoption of EU LCI value
10-6*	2-Methoxy-1-methylethyl acetate	108-65-6	**2 700**	Adoption of EU LCI value
10-7	n-Butyl formate	592-84-7	**2 000**	Read across of Methyl formate (AGW: 120 000 µg/m³)
10-8	Methyl methacrylate	80-62-6	**2 100**	AGW: 210 000 µg/m³
10-9	other methacrylates		**2 100**	Read across of methyl methacrylate
10-10*	Isobutyl acetate	110-19-0	**4 800**	Adoption of EU LCI value
10-11*	1-Butyl acetate	123-86-4	**4 800**	Adoption of EU LCI value
10-12*	2-Ethylhexyl acetate	103-09-3	**350**	Read across of 2-ethyl-1-hexanol
10-13*	Methyl acrylate	96-33-3	**180**	Adoption of EU LCI value
10-14*	Ethyl acrylate	140-88-5	**210**	Adoption of EU LCI value
10-15*	n-Butyl acrylate	141-32-2	**110**	Adoption of EU LCI value
10-16*	2-Ethylhexyl acrylate	103-11-7	**380**	Adoption of EU LCI value
10-17*	other acrylates (acrylic acid esters)		**110**	Adoption of EU LCI value
10-18*	Adipic acid diethyl ester	627-93-0	**50**	Adoption of EU LCI value
10-19*	Fumaric acid dibutyl ester	105-75-9	**50**	Adoption of EU LCI value
10-20*	Bernstein acid dimethyl ester	106-65-0	**50**	Adoption of EU LCI value
10-21*	Glutaric acid dimethyl ester	1119-40-0	**50**	Adoption of EU LCI value
10-22*	Hexanediol diacrylate	13048-33-4	**10**	Adoption of EU LCI value
10-23*	Maleic acid dibutyl ester	105-76-0	**50**	Adoption of EU LCI value

Draft

	Substance	CAS No.	LCI [µg /m³]	Comments
1	**Aromatic hydrocarbons**			
10-24	Butyrolactone	96-48-0	**2 700**	Individual substance analysis
10-25	Glutaric acid diisobutyl ester	71195-64-7	**100**	Individual substance analysis
10-26	Bernstein acid diisobutyl ester	925-06-4	**100**	Individual substance analysis
11	**Chlorinated hydrocarbons**			
	Not used at present			
12	**Other**			
12-1	1,4-Dioxane	123-91-1	**73**	AGW: 73 000 µg/m³
12-2*	Caprolactam	105-60-2	**300**	Adoption of EU LCI value
12-3	N-Methyl-2-pyrrolidone	872-50-4	**400**	EU-OEL: 40 000 µg/m³
12-4*	Octamethylcyclotetrasiloxane (D4)	556-67-2	**1 200**	Adoption of EU LCI value
12-5*	Methenamine, Hexamethylentetramine (formaldehyde releaser)	100-97-0	**30**	Adoption of EU LCI value
12-6	2-Butanonoxime	96-29-7	**20**	Individual substance analysis
12-7	Tributyl phosphate	126-73-8		SVOC
12-8	Triethyl phosphate	78-40-0	**75**	Read across of tributyl phosphate (AGW: 11 000 µg/m³)
12-9*	5-Chloro-2-methyl-4isothiazolin-3-on (CIT)	26172-55-4	**1**[#]	Adoption of EU LCI value
12-10*	2-Methyl-4-isothiazolin-3-one (MIT)	2682-20-4	**100**	Adoption of LCI value
12-11	Triethylamine	121-44-8	**42**	AGW: 4 200 µg/m³
12-12	Decamethylcyclopentasiloxane (D5)	541-02-6	**1 500**	Read across of octamethylcyclotetrasiloxane
12-13	Dodecamethylcyclopentasiloxane (D6)	540-97-6	**1 200**	Read across of octamethylcyclotetrasiloxane
12-14	Tetrahydrofuran	109-99-9	**1 500**	AGW: 150 000 µg/m³
12-15	Dimethylformamide	68-12-2	**15**	AGW: 15 000 µg/m³
12-16*	Tetradecamethylcycloheptasiloxane (D7)	107-50-6	**1 200**	Read across of octamethylcyclotetrasiloxane

* New inclusions/Amendments 2015
\# LCI value assessment only takes place from measured emissions of 5µg/m³.
VVOC very volatile organic compounds
SVOC semi-volatile organic compounds
1) To ensure compatibility with the ADAM evaluation template, sequential numbers in the LCI list formerly used may not be reused if substances or substance groups are discontinued or re-sorted.

Comments:

I) The following links point to lists of substances classified as category 1A or 1B carcinogens under EU Regulation 1272/2008, and for which testing and control under the scheme are required (version should be up-to-date):

- BGIA, Berufsgenossenschaftliches Institut für Arbeitsschutz [Institute for Occupational Safety and Health]
  http://www.dguv.de/ifa/de/fac/kmr/index.jsp
- ECHA, European Chemicals Agency
  http://echa.europa.eu/web/guest/information-on-chemicals/cl-inventorydatabase

Draft

Appendix 3

The health protection requirements of physical structures are primarily influenced by products that contain significant proportions of organic substances and therefore tend to release organic compounds. These include the following products in particular:

- floorings and constructions such as
    - textile flooring
    - elastic floorings
    - laminate flooring
    - parquet and wooden floors
    - floor coatings
    - synthetic-resin floor screeds and mortars
    - artificial resin stone
- sports floors
- floor covering adhesives and structural adhesive bonds
- underlays
- surface coatings for wooden floors and elastic floorings
- decorative wall cladding and synthetic thick wall coatings
- fireproof coatings for steel components
- ceiling panelling and structures with the above-mentioned properties
- insulating materials with the above-mentioned properties such as phenolic foam, in-situ UF foam
- treated or bonded wood
- organic fire protection agents applied subsequently

These products must provide evidence that they meet the building requirements if used in accommodation areas and associated ancillary areas. Compliance with the product requirements stated therein must be demonstrated in this case.

In general, no evidence is required for

- Products that are purely or predominantly mineral such as concrete, bricks, ceramic, sand-lime, aerated concrete, gypsum products such as gypsum plasterboards, gypsum fibre boards, gypsum wall panels, building plaster and gypsum-based adhesives and priming materials and mineral-based screed such as cement screed or calcium sulfate screeds
- uncoated metallic building materials
- transparent components (e.g. windows)
- untreated wood and
- glass products including small fixtures.

This does not apply to products for which the radioactivity requirements do not need to be taken into account.

The list of products is not exhaustive. New innovative products or scientific knowledge regarding the effects of such products may make it necessary to change the list.

Draft

Technical Rule – Textile floorings

Draft 17 June 2016

1 Subject matter and scope

The document "Health protection requirements for physical structures" (ABG) contains general principles for the health assessment of physical structures, components, construction kids and building materials which are necessary to comply with the building requirements, while the product-specific requirements for textile floorings are clarified in the technical rule.

This document specifies the test conditions (test sample requirements, test chamber loading requirements, etc.) and the parameters for classifying individual products in groups and selecting the representative product for each group (worst case scenario).

This technical rule does not apply

- to woven textile floorings with a PVC surface layer,
- to textile floorings that contain waste for recovery, unless the material for these is identical to production waste,
- to textile floorings that are also used vertically.

Textile floorings with components made of old tyres may not be used in accommodation areas.

2 Requirements

The requirements set out in the document "Health protection requirements for physical structures" (ABG), Chapter 2 must be met. According to this, the constituents, emissions from volatile organic compounds and requirements on the content must be assessed.

2.1 Determining and assessing volatile organic emissions (VVOC, VOC and SVOC emissions) and other emissions from textile floorings where applicable

Emissions of hazardous substances are determined by an expert inspection body (see Section 2.4) using a test chamber test as per ABG Section 2.2.1 and assessed as per ABG Section 2.2.4 and Section 2.3. This test chamber test must be conducted on each individual product or on a representative product of a group of chemically similar individual products in line with the following group formation parameters.

2.1.1 Group formation parameters and selection of representative products (worst case scenario)

Individual textile floorings must be classified in groups successively according to

- the manufacturing process,
- the chemical base of the pile material/surface layer,
- adhesive layers/solidification and back base
- and additional chemical features

(see Figure 1).

A product is deemed representative of a group if it is expected to have the highest emissions – generally the heaviest and thickest product; in case of doubt, select the heaviest product. Where appropriate, several products in a group may have to be tested. The values are assumed to be representative of the group.

2.1.1.1 Classification in line with the manufacturing process

Individual products are first divided in line with the manufacturing process as follows: DIN EN 1307:2014-07 into

- tufted
- woven
- needled.

2.1.1.2 Classification in line with the chemical base of the pile material/surface layer

After being divided according to manufacturing process, the individual products are further divided according to the chemical base of the pile material/surface layer as follows:

- Polypropylene (PP),
- Polyester (PES),
- Polyamide (PA 6 and PA 6.6, select PA 6 in the worst case scenario),
- wool,
- natural plant fibres,
- etc.

For material blends, the chemical base of the pile with at least 50 % proportion in weight is the deciding factor for classification.

2.1.1.3 Classification according to adhesive layer/solidification and back base

The textile floorings previously divided according to manufacturing process and pile layer are further classified according to the backing material

- textile backing
- foam backing (same chemical base)
- heavy backing (same chemical base)
- etc.

Care must be taken to ensure that products with the same backing have the same chemical base for the adhesive coats/solidification in order to be divided into the same group.

2.1.1.4 Classification according to additional chemical features

Lastly, the textile floorings are divided in terms of additional chemical features as follows:

- with or without flame protection (with the same chemical base)
- with or without anti-microbial/anti-fungal protection (with the same chemical base)
- with or without anti-static protection (with the same chemical base)
- etc.

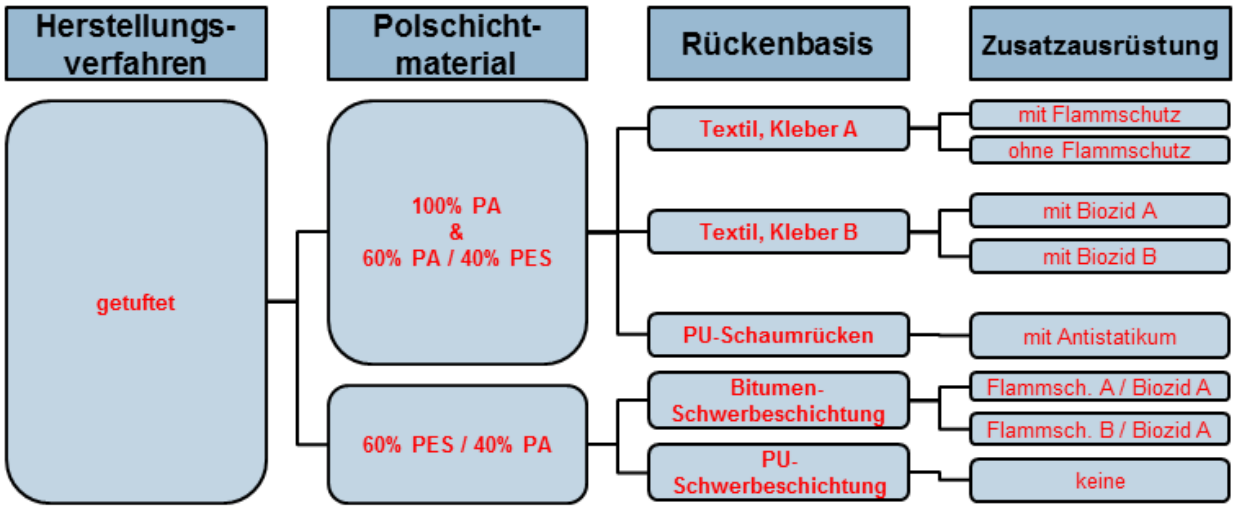

Herstellungsverfahren	Manufacturing process
Polschichtmaterial	Pile layer material
Rückenbasis	Back base
Zusatzausrüstung	Additional features
getuftet	tufted
100% PA & 60% PA / 40% PES	100% PA & 60% PA / 40% PES
60% PES / 40% PA	60% PES / 40% PA
Textil, Kleber A	Textile, adhesive A
Textil, Kleber B	Textile, adhesive B
PU-Schaumrücken	PU foam backing
Bitumen-Schwerbeschichtung	Bitumen heavy backing
PU-Schwerbeschichtung	PU heavy backing
mit Flammschutz	with flame protection
ohne Flammschutz	without flame protection
mit Biozid A	with biocide A
mit Biozid B	with biocide B
mit Antistatikum	with anti-static agent
Flammsch. A / Biozid A	flame protection A/biocide A
Flammsch. B / Biozid A	flame protection B/biocide B
keine	none

Figure 1: Sample grouping

It should be noted that changes in the chemical composition require a new assessment of the products/groups, which can result in new emissions testing.

2.1.2 Sampling of the product, transport and storage of the sample

Sampling of the product, transport and storage of the sample are in principle done in accordance with DIN prEN 16516:2015-07[37] and CEN/TR 16220:2011. The samples must be taken fresh from the production line or as soon as they can be traded and a sampling log with all key data must be drawn up (see Appendix 1 for an example) and enclosed with the samples.

[37] The current draft, DIN EN 16516 is expected at end-2016.

It should always be kept in mind that influences such as:

- heat
- intense light
- excessive humidity
- detergents
- waste gases from vehicles or machinery
- and solvents from colours, paints, fuels, exhaust gases etc.

could distort inspection results or contaminate samples.

2.1.2.1 Sample size and sampling

When sampling products on rolls, one metre or at least the exposed part of the roll should be removed first. Then, 1 to 1.5 metres of the adjacent section should be taken as a sample. The width of the sample should be less than 2 m where possible. Where required, the width of the sample should be reduced accordingly. After the sample has been taken, it should be rolled up transversely with respect to the original direction, with the lower surface of the flooring facing outwards. After rolling up, the sample should be secured against unrolling using brackets or cords, but never using adhesive tape.

When taking samples from textile tiles, a full packaging unit must be used. If the size of the packaging unit makes shipment impossible, the sample should consist of four tiles (more for smaller tiles) in pairs with upper surfaces facing each other, taken from the centre of a single packaging unit. Textile tile floorings may not be rolled.

2.1.2.2 Packaging

Samples must be wrapped in aluminium foil within one hour, packed into a low-emission polyethylene bag and sealed. As an alternative, aluminium-coated packaging material may be used. To prevent external contamination, the package should be sealed maximally airtight with a film welding device or a low-emission adhesive tape. Different samples must also be packed separately.

2.1.2.3 Transport/shipment/storage

The usual freight and courier services may be used to ship samples. In transporting samples, it should be kept in mind that the sample should not be stored near any solvent-containing substances (e.g. spare drums).

2.1.3 Production and preparation of the test specimen

The test specimen is essentially produced and prepared according to DIN EN ISO 16000-11, Annex A. Contrary to the standard, the test specimen may also be blanked out. Edge sealing is not required as the effect of edges of textile floorings on emissions is negligible.

Once the test specimen has been produced, it should immediately be placed in the emission test chamber. This time is considered the starting time of the emission test (t_0).

2.1.4 Test chamber conditions for measuring the emissions of textile flooring samples

Based on the dimensions of the reference area (DIN prEN 16516:2015-07[39]), the following loading factors must be determined for textile floorings:

- 0.4 m²/m3 for floors

DIN prEN 16516:2015-07[2] sets an air exchange rate of 0.5 and climatic conditions of 23 °C ± 1 °C and 50% ± 5 % relative humidity. The test chamber volume must not be below 20 l.

2.1.5 Measuring the emissions of textile flooring samples

Emissions of textile flooring samples are measured as set out in the ABG and the DIN prEN 16516:2015-07[2] standard and evaluated after 3 days and 28 days.

The emissions test may be terminated early 7 days after loading the test chamber if the measured values are less than 50 % of the 28-day limit set out in the ABG, and if no significant increases in the concentration of individual substances can be found in comparison to the measurements of the third day. Compliance with these criteria should be appropriately corroborated by the test laboratory. The 50 % limit applies to all parameters, i.e. including the R value.

2.2 Assessing volatile organic emissions (VVOC, VOC and SVOC emissions)

The results of emission measurements for VVOC, VOC and SVOC must be assessed as set out in ABG Chapter 2.2 and detailed in a test report.

2.3 Determining the content of polycyclic aromatic hydrocarbons (PAHs)

When using heavy bituminous coatings, the PAH content in the bitumen must be tested. Analytical determination of PAHs is done as set out by the Environmental Protection Agency (EPA) in line with AfPS GS 2014:01 PAK using an internal standard. The BaP content as the lead compound is restricted to 5 mg/kg and to 50 mg/kg for PAHs.

2.4 Inspection body requirements for carrying out emissions testing on textile floorings

Inspection bodies for emissions testing must meet the following requirements:

- they must be independent, i.e. they must operate independently of the economic interests of individual manufacturers
- they must be notified as per DIN ISO 17025, including test chamber examinations
- they must be notified as per DIN EN 16516 (until DIN EN 16516 is published in the Official Journal of the European Union, notification as per DIN CEN/TS 16516:2013-09 is sufficient).
- they must have the technical equipment for VOC, VVOC and SVOC emissions testing as per DIN prEN 16516:2015-07[39]
- LCI substances must be present as standards (ABG Annex 2)
- Substances classified as 1A and 1B carcinogens that could potentially be emitted by textile floorings must be present as standard. The 'Indicative List of Regulated Dangerous Substances possibly associated with construction products under the CPD' (European Commission document, Enterprise and Industry Directorate-General, document number "DS 041/051" as amended) may be used as a guide.
- they must take part in at least one ring trial for VOC thermodesorptions measurements as per DIN prEN 16516:2015-07[39]. Participation in ring trials offered by BAM and IFA is recommended (see:
    - http://www.bam.de/de/fachthemen/ringversuche/
    - http://www.dguv.de/ifa/Fachinfos/Ringversuche/index.jsp)

Draft

Appendix 1: Sampling log for emissions testing on textile floorings

Name of applicant (Address/stamp):		**Product manufacturer** (if different from applicant):	
Factory where the sample was taken:		**Sampler** (please check): name, company, telephone:	
Product name:		**Flooring type** textile flooring:	
Model/ programme/ series:		**Batch no.:**	
Item no.:		**Date of production of the batch:**	
Date of sampling:		**Time:**	
Sample taken	□ from current production □ from stocks □ from reserve samples	**How was the product stored before sampling?**	□ unpackaged □ packaged
Storage location:		**Packaging type and material:**	
Details (any negative influences due to emissions at the place of sampling, fuel-exhaust gases, solvent emissions from production, uncertainties, questions, etc.):			
Testing envisaged:			
□ Emissions testing □ Design features □ other/further (PAH, nitrosamine, etc.)			
Confirmation The undersigned hereby confirms the accuracy of the above statements. The sample was selected by the manufacturer, taken and packaged according to the sampling guide.			
Date:	Signature: (Stamp)		

* Please complete one sampling report per sample!

Draft

List of abbreviations

ABG	Health protection requirements for physical structures
BAM	Bundesanstalt für Materialforschung [Federal Institute for Materials Research]
BaP	Benzo(a)pyrene
BauPVO	Construction Products Regulation [Bauproduktenverordnung]
CPD	Construction Product Directive (superseded by the CPR – Construction Product Regulation on 01/07/2013)
DIN	Deutsches Institut für Normung [German Institute for Standardisation]
EN	European Standard
EPA	Environmental Protection Agency
IFA	Institut für Arbeitsschutz [Institute for Occupational Safety and Health]
LBO	Landesbauordnung [state building regulations]
LCI	Lowest Concentrations of Interest
PAH	Polycyclic aromatic hydrocarbons
PA 6	Polyamide 6 (nylon)
PA 6.6	Polyamide 6.6 (dederon)
PES	Polyester
PP	Polypropylene
prEN	Draft standard
PVC	Polyvinyl chloride
R value	Total of all R_i where $R_i = c_i / LCI_i$
SVOC	Semi-volatile organic compounds
t_0	Start of emission measurement
VOC	Volatile organic compounds
VVOC	Very volatile organic compounds

Draft

Literature and references to standards

CEN/TR 16220:2011
Construction products - Assessing the release of hazardous substances – Sampling Supplement

DIN CEN/TS 16516:2013-12/DIN SPEC 18023:2013-12
Construction products - Assessing the release of hazardous substances – Determining emissions in indoor air

DIN EN 1307:2014-07
Textile Floorings – Classification

DIN EN 16516 expected end-2016
Construction products - Assessing the release of hazardous substances – Determining emissions in indoor air

DIN EN ISO 16000-11:2006-06
Contamination of indoor air - Part 11: Determination of the emission of volatile organic compounds from construction products and furnishing - Sampling, storage of samples and preparation of test specimens.

DIN EN ISO/IEC 17025:2005-08
General requirements for the competence of testing and calibration laboratories

DIN prEN 16516:2015-07
Construction products - Assessing the release of hazardous substances – Determining emissions in indoor air (Draft standard)

AfPS GS 2014:01 PAK
Testing and assessment of polycyclic aromatic hydrocarbons (PAHs) when granting the GS mark

Draft

Requirements for physical structures regarding effects on soil and water (ABuG)

Draft: 15 June 2016

1 Subject matter and scope

§ 3 of the Model Building Regulation (MBO), transposed in state building regulations (LBO), provides that structures must be positioned built, modified and maintained in such a way that public safety and order, particularly life, health and natural resources are not endangered and that they meet environmental protection requirements in particular.

To meet the requirements set out in the MBO/LBO, physical structures or components thereof installed in the soil or groundwater or subject to precipitation must ensure that the components used do not cause any harmful soil changes or groundwater pollution.

This document sets out the general requirements in respect of their effects on soil and water.

Physical structures whose components and building products used therein that are installed in soil and groundwater or are subject to precipitation are of particular significance because of their effects on soil and water. On contact with water, substances can be washed out of them and enter the groundwater, seawater, surface water and/or the soil that could adversely affect the quality thereof and thereby contribute to endangering natural resources.

Physical structures, their components and construction products used therein must therefore meet environmental protection requirements in respect of their constituents and the release of hazardous substances[39]. An assessment of the release of heavy metals and organic substances is particularly relevant in this regard. The installation situation must also be taken into account (direct or indirect contact with the soil and groundwater). Where constructive measures exclude the release of hazardous substances, no evidence need be provided regarding the release of hazardous substances.

Under § 1 German Soil Protection Law [Bundes-Bodenschutzgesetz – BBodSchG], damage caused to the natural soil functions and its function as an archive of natural and cultural history by physical structures must be avoided as far as possible.

If waste is used in physical structures, components and construction products used therein (regardless of contact with the soil, precipitation or water) no damage to the public good should be expected and in particular no pollutants should accumulate in the recyclable material cycle.

The right of the competent water authorities to retain reservation on the granting of permission remains unaffected, particularly in water protection areas under the provisions of ABuG.

Table 1 contains components in contact with the soil, groundwater and/or precipitation for which compliance with environmental protection requirements under state building regulations must be fulfilled (environmentally relevant components).

[39] The term "hazardous substances" is used in the Construction Products Regulation and refers to substances that are relevant to construction products and that are restricted or prohibited by EU and/or Member State provisions due to the risk of harmful effects.

Draft

Table 1: Environmentally relevant components (components in contact with the soil, groundwater and/or precipitation)

Building components		**Requirement see Section**
Roof	Metal roof components	4.1
	Concrete roof components	4.2
	Timber roof components	4.3
	Sealing	4.4
External wall	Metal external wall components	5.1
	Concrete external wall components	5.2
	Timber external wall components	5.3
	Sealing	5.4
	Fire protection products	5.5
Surface coverings	Concrete surface coverings	6.1
	Timber surface coverings	6.2
	Water infiltration areas	6.3
Foundations including piles	Injection and grouting materials	7.2
	Concrete components	7.3
	Sealing	7.4
Excavation seals	Injection and grouting materials made of binder suspensions or grout	8.2
	Silicone-based injection and grouting materials	8.3
Granular backfill	Backfill using waste	9.1
	Foam glass gravel used to backfill foundation slabs	9.2
	Filter materials for treating precipitation	9.3
Underground pipes and containers	Underground concrete containers and pipes	10.1
	Sewer rehabilitation products	10.2

8. Requirements on the content of hazardous substances

Environmentally relevant components must meet the following requirements in respect of their content of hazardous substances:

They must comply with the applicable statutory bans on use and restrictions for specific substances (e.g. Chemicals Prohibition Ordinance, REACH Regulation (EU) No. 1907/2006 Annex XVII).

When scrap wood is used in components, the requirements of the Waste Wood Ordinance (AltHolzV) must be met, and in particular the thresholds for substances set out therein must be adhered to.

Only biocides that can be used in components in direct contact with the ground and/or water may be used under the Biocide Regulation (EU) No. 528/2012 and the corresponding national implementing regulations, depending on the installation scenario.

The use of substances that must under CLP Regulation (EU) No. 1272/2008, as amended, be marked H400, H410, H411, H300, H301, H310, H311, H370, H372 are to be avoided. Where the use of such substances cannot be avoided, it must be shown that their use in the physical structure does not endanger protected resources.

Persistent Organic Pollutants (POPs) in the currently valid ICCA list[40] may not be actively used[41].

Carcinogenic (H350) and germ-cell mutagenic (H340) substances under CLP Regulation (EU) No. 1272/2008 may not be actively[41] used unless it can be shown that when the component is manufactured, they bind completely to compounds that pose no risk to soil or water.
Substances toxic to reproduction (H360D and/or H360F) substances under CLP Regulation (EU) No. 1272/2008 may not be actively used[41] at > 0.3 % by weight unless it can be shown that when the component is manufactured, they bind completely with compounds that pose no risk to soil or water.

[40] International Council of Chemical Associations (ICCA) pursuant to the 2004 United Nations Environment Programme Convention (UNEP Convention; http://www.pops.int)

[41] Active use is the targeted use of substances to achieve particular product properties. Not "actively used" substances are those which are present in the product as contaminations and/or minor constituents.

Under the requirements of § 7(3) of the Life Cycle Management Act (KrWG) on the non-toxicity of waste recovery, no damage to public health due to the condition of the waste, the extent of pollution and the type of recovery and in particular no accumulation of pollutants should occur in the recyclable material cycle. This means that when assessing construction products – provided waste is used to manufacture the construction products – it must be ensured that the

use of contaminated waste does not lead to the introduction of pollutants in construction products and hence to the accumulation of pollutants in physical structures.

For construction products in which mineral waste materials are used, the basic requirements of LAGA Notification 20 "Requirements for material recovery from mineral waste – Guidelines" (as at 06 November 2003) must be complied with. Eluate content must comply at least with the Z 2 allocation values of the waste-related technical rules of these regulations. Where there are no waste-related technical rules in LAGA Notification 20 on specific waste, the Z 2 allocation values in the technical rules on soil (as at 05 November 2004) must be used. The values in Table A-1 (Annex A) must be complied with for concentrations of substances in solid matter. Deviations are possible if the concentrations of substances in the primary raw material substituted by waste previously used to manufacture the construction product are higher or – for organic substances – these substances are destroyed during the component manufacturing process to the extent that the requirement values in Table A-1 (Annex A) are adhered to.

9. Requirements on the release of hazardous substances

The concentration of hazardous substances released from physical structures may

- change the chemical composition of bodies of water to only a negligible extent,
- have no relevant eco-toxicological effects on bodies of water and
- not adversely affect or overload the natural soil function, in particular the function of the soil as a decomposition, neutralisation and regeneration medium for material impacts by virtue of its filtering, buffering and substance conversion properties (filter and buffer function), and in particular for water protection purposes.

This is deemed to have been satisfied if for example the de-minimis thresholds[42] and the requirements listed below in this Section are met.

Note: Eluate concentrations determined in laboratory tests are generally not directly comparable with the specification values at the place of assessment under real conditions. The installation situation and any transport pathways must be taken into account, for example with transfer functions.

The release of hazardous substances from physical structures may not cause any lasting changes to electric conductivity or the pH value or cause any other changes in water such as discolouration, turbidity, foaming or smell.

If the requirement values (Annex A) for the release of hazardous substances from a specific component/construction product are complied with – insofar as these are explicitly specified – these requirements are deemed to have been met.

Where organic substances are released from physical structures for which no test values exist, the requirements under Table 2 must also be met.

[42] The test values for the release of hazardous substances listed in ABuG are based on the LAWA de-minimis thresholds: LAWA: "Ableitung von Geringfügigkeitsschwellen für das Grundwasser" [Deriving de-minimis thresholds for groundwater], December 2004, available from Kulturbuch-Verlag GmbH, post box 47 04 49, 12313 Berlin or from the LAWA homepage: www.lawa.de

Table 2: Requirements for environmentally relevant components of organic materials in respect of the biological effects in groundwater

Parameters	**Test during materials reaction***	**Testing of fully cured materials***
TOC	Indication in mg/l	Indication in mg/l
Scenedesmus-chlorophyl-fluorsescence assay as per DIN 38412-33	G_A[43] ≥ 8	G_A[43] ≥ 4
Movement inhibition test with *Daphnia magna Straus* as per DIN 38412-30 or ISO 6341	G_D ≥ 8	G_D ≥ 4
Luminescent bacteria inhibition test with *Vibrio fischeri* or G_L > 8, then luminescent bacteria cell propagation inhibition test as per DIN EN ISO 11348-1 to DIN EN ISO 11348-3	G_L ≥ 8 G_{LW} ≥ 2	G_L ≥ 8 G_{LW} ≥ 2
Fish egg test with Danio rerio as per DIN 38415-6	G_{EI} ≥ 6	G_{EI} ≥ 6
umu-test on mutagenic potential under DIN 38415-3	G_{EU} ≥ 1.5	G_{EU} ≥ 1.5
Biodegradability where TOC > 10 mg/l	"readily biodegradable" as	"readily biodegradable" as per OECD 301

	per OECD 301	

* The requirements relate to elution testing on the component/construction product.

[43] Under the test specifications, inhibition of cell reproduction of green algae of 20 % and more is classified as a toxic effect. The thinning level necessary for under 20 % inhibition of the original eluate (thinning level GA) is determined. The other G values are defined analogously.

10. Requirements for roof components

No evidence need be provided in respect of the release of hazardous substances for small-scale building components such as fastenings, lightning conductors.

4.1 Metal roof components

NB: Extensive metal sheets may cause environmental impact on soil and water. For decentralised drainage of rainwater, reference is made to the requirements of the statutory planning and water regulations and to other local legal provisions, according to which precipitation cannot be allowed to leach out untreated.

4.2 Concrete roof components

Concrete starting materials used in roof components must meet the requirements set out in the following sections.

When using natural aggregates, no evidence need be provided in respect of concentrations of substances and the release of hazardous substances.

Construction products manufactured using display glass may not be used.

4.2.1 Recycled aggregates

Concrete roof components manufactured using recycled aggregates may only be installed if the recycled roof components meet the following requirements:

- Waste from a rubble waste treatment facility may only be used as starting materials for manufacturing recycled aggregates if it is produced during construction work (e.g. dismantling, demolition, conversion, extension, new construction and maintenance of structural and civil engineering, roads, paths, aerodromes and other traffic areas) and were previously used as natural or artificial mineral building materials in bound or unbound form in structural and civil engineering works. The waste must correspond to the waste types mentioned in Table A-2 (Annex A). Before converting, dismantling or demolishing a structure, a visual inspection and evaluation of existing documentation must first be done to determine whether there is likely to be pollutants in the materials. If there could be pollution beyond the scope of the parameters set out in Table A-3, the material must be separately
- assessed under waste regulations. Contaminated building materials and components must be separated when a structure is being dismantled and disposed of separately. This relates in particular to rubble, components with pitch-based insulation and coatings, internal walls of industrial chimneys, substances containing asbestos and PCBs, sections of gas works, service stations, electroplating plants and production facilities in chemical industry contaminated with pollutants.
- Eluate concentrations under DIN EN 12457-4 in recycled aggregates must comply with the upper limits under Table A-3 (Annex A).
- Concentrations of solid matter in recycled aggregates must comply with the upper limits under Table A-3 (Annex A).
- For concrete as per DIN 1045-2, the material composition of the recycled aggregates must correspond to delivery types under DafStb Guideline concrete as per DIN EN 206-1 and DIN 1045-2 with recycled aggregates as per DIN EN 12620.

When reject batches from ready-mixed concrete components are used directly as recycled aggregates in the production plant, no evidence need be provided in respect of concentrations of substances and the release of hazardous substances.

4.2.2 Industrially manufactured aggregates

Concrete roof components manufactured using industrially manufactured aggregates may only be installed if the industrially manufactured aggregates meet the following requirements:

- Eluate concentrations under DIN EN 12457-4 in industrially manufactured aggregates must comply with the upper limits under Table A-4 (Annex A).
- Concentrations of solid matter in industrially manufactured aggregates must comply with the upper limits under Table A-4 (Annex A).

When using crystalline blast furnace slag, granulated blast furnace slag, slag tap granulate, vermiculite, expanded perlite, expanded shale, expanded clay, brick chippings from unused bricks and sintered hard coal fly ash, boiler slag (boiler sand) from thermal power plants in which only coal and no secondary combustion materials are burnt as aggregates (or rock dust) in concrete, no evidence need be submitted regarding substance content and the release of hazardous substances.

Draft

Industrially manufactured aggregates that are not listed in the above paragraph or in Table A-4 may not be used in concrete.

4.2.3 Fly ash
Concrete roof components manufactured using silicone-rich fly ash (generally hard coal fly ash) may only be installed if the silicone-rich fly ash meets the following requirements:

- Eluate concentrations under DIN EN 12457-4 in silicone-rich fly ash and
- concentrations of solid matter in silicone-rich fly ash must meet the requirements under Table A-5 (Annex A).

There are no technical building regulations or generally recognised rules of the trade for evaluating the effects on soil and water of calcium-rich fly ash (generally lignite fly ash) for concrete foundations. However, they are of significance when it comes to complying with the requirements of § 3 of state building regulations regarding their effects on soil and water.

4.3 Timber roof components
Timber components treated with wood preservative may only be used for roof components (including windows) if the wood preservative (biocide products) meet the requirements of the Biocide Regulation (EU) No. 528/2012. When using biocide products, the constraints listed in the approval under the Biocide Regulation pursuant to Article 22(1) of the Biocide Regulation and/or nationally applicable transitional provisions pursuant to the Order on the reporting of biocidal products pursuant to the Chemicals Act (Biocide Reporting Order [German designation: ChemBiozidMeldeV]) must be met. Timber components treated with preservatives to guard against biological infestation must be marked as per DIN EN 15228:2009, Section 6.

When using scrap timber roof components, the requirements of the Waste Wood Ordinance must be met.

Timber components for roof components treated with flame retardants must meet the requirements under Section 2 in respect of the content of hazardous substances. Hazardous substances contained in the product must be declared.

4.4 Waterproofing layers for roof components
Waterproofing layers for roof components containing substances used to inhibit or prevent root penetration may only be installed if the requirements under Section 2 and the eluate concentration in the root penetration protective agent under Section 3 are met.

11. Requirements for external walls
No evidence need be provided in respect of the release of hazardous substances for small-scale building components such as fastenings.

No evidence need be submitted regarding substance content and the release of hazardous substances in particular for external wall components of natural stone, glass or ceramic.

5.1 Metal external wall components
NB: Extensive metal sheets may cause environmental impact on soil and water. For decentralised drainage of rainwater, reference is made to the requirements of the statutory planning and water regulations and to other local legal provisions, according to which precipitation cannot be allowed to leach out untreated.

5.2 Concrete external wall components
Concrete starting materials used in external wall components must meet the requirements set out in the following sections.

When using natural aggregates, no evidence need be provided in respect of concentrations of substances and the release of hazardous substances.

Construction products manufactured using display glass may not be used.

5.2.1 Recycled aggregates
Concrete external wall components manufactured using recycled aggregates may only be installed if the recycled roof components meet the following requirements:

- Waste from a rubble waste treatment facility may only be used as starting materials for manufacturing recycled aggregates if it is produced during construction work (e.g. dismantling, demolition, conversion, extension, new construction and maintenance of structural and civil engineering, roads, paths, aerodromes and other traffic areas) and were previously used as natural or artificial mineral building materials in bound or unbound form in structural and civil engineering works. The waste must correspond to the waste types mentioned in Table A-2 (Annex A). Before converting, dismantling or demolishing a structure, a visual inspection and evaluation of existing documentation must first be done to determine whether there is likely to be pollutants in the materials. If there could be pollution beyond the scope of the parameters set out in Table A-3, the material must be separately assessed under waste regulations. Contaminated building materials and components must be separated when a structure is being dismantled and disposed of separately. This relates in particular to rubble, components with pitch-based

insulation and coatings, internal walls of industrial chimneys, substances containing asbestos and PCBs, sections of gas works, service stations, electroplating plants and production facilities in chemical industry contaminated with pollutants.
- Eluate concentrations under DIN EN 12457-4 in recycled aggregates must comply with the upper limits under Table A-3 (Annex A).
- Concentrations of solid matter in recycled aggregates must comply with the upper limits under Table A-3 (Annex A).
- For concrete as per DIN 1045-2, the material composition of the recycled aggregates must correspond to delivery types under DafStb Guideline concrete as per DIN EN 206-1 and DIN 1045-2 with recycled aggregates as per DIN EN 12620.

When reject batches from ready-mixed concrete components are used directly as recycled aggregates in the production plant, no evidence need be provided in respect of concentrations of substances and the release of hazardous substances.

5.2.2 Industrially manufactured aggregates

Concrete external wall components manufactured using industrially manufactured aggregates may only be installed if the industrially manufactured aggregates meet the following requirements:
- Eluate concentrations under DIN EN 12457-4 in industrially manufactured aggregates must comply with the upper limits under Table A-4 (Annex A).
- Concentrations of solid matter in industrially manufactured aggregates must comply with the upper limits under Table A-4 (Annex A).

For concrete external walls manufactured using industrially manufactured aggregates used in contact with soil and groundwater, the eluate concentrations as per CEN/TS 16637-2 (for hardened concrete test samples) must comply with the upper limits under Table A-6 (Annex A).

Evidence that the eluate concentrations as per CEN/TS 16637-2 comply with the upper limits under Table A-6 (Annex A) is not required if direct contact with soil or groundwater is prevented through constructive measures.

When using crystalline blast furnace slag, granulated blast furnace slag, slag tap granulate, vermiculite, expanded perlite, expanded shale, expanded clay, brick chippings from unused bricks and sintered hard coal fly ash, boiler slag (boiler sand) from thermal power plants in which only coal and no secondary combustion materials are burnt as aggregates (or rock dust) in concrete, no evidence need be submitted regarding substance content and the release of hazardous substances.

Industrially manufactured aggregates that are not listed in the above paragraph or in Table A-4 may not be used in concrete.

5.2.3 Fly ash

Concrete external wall components manufactured using silicone-rich fly ash (generally hard coal fly ash) may only be installed if the silicone-rich fly ash meets the following requirements:

- Eluate concentrations under DIN EN 12457-4 in silicone-rich fly ash and
- concentrations of solid matter in silicone-rich fly ash must meet the requirements under Table A-5 (Annex A).

For concrete external walls manufactured using silicone-rich fly ash used in contact with soil and groundwater, the eluate concentrations as per CEN/TS 16637-2 (for hardened concrete test samples) must comply with the upper limits under Table A-6 (Annex A).

Evidence that the eluate concentrations as per CEN/TS 16637-2 comply with the upper limits under Table A-6 (Annex A) is not required if direct contact with soil or groundwater is prevented through constructive measures.

There are no technical building regulations or generally recognised rules of the trade for evaluating the effects on soil and water of calcium-rich fly ash (generally lignite fly ash) for concrete external wall components. However, they are of significance when it comes to complying with the requirements of § 3 of state building regulations regarding their effects on soil and water.

5.2.4 Super sulfated cement and calcium aluminate sulfated cement

Components for concrete external walls manufactured using super sulfated cement and calcium aluminate sulfated cement may only be installed in contact with soil and groundwater if the eluate concentrations as per CEN/TS 16637-2 (for hardened concrete test samples) comply with the upper limits under Table A-7 (Annex A).

Evidence of these requirements is not necessary if direct contact with soil or groundwater is prevented through constructive measures.

5.2.5 Concrete admixtures for concrete external walls

Concrete admixtures used in concrete for external walls in contact with soil or groundwater and for which there are no technical building regulations or generally recognised rules of the trade are significant when it comes to complying with the requirements of § 3 of state building regulations including in respect of their effects on soil and water.

5.3 Timber external wall components
Timber components treated with wood preservative may only be used on external walls (including windows and doors) if the wood preservative (biocide products) meet the requirements of the Biocide Regulation (EU) No. 528/2012. When using biocide products, the constraints listed in the approval under the Biocide Regulation pursuant to Article 22(1) of the Biocide Regulation and/or nationally applicable transitional provisions pursuant to the Order on the reporting of biocidal products pursuant to the Chemicals Act ([Biocide Reporting Order - German designation:] ChemBiozidMeldeV) must be met. Timber components treated with preservatives to guard against biological infestation must be marked as per DIN EN 15228:2009, Section 6.

When using scrap timber for external wall components, the requirements of the Waste Wood Ordinance must be met.

Timber components for external wall components treated with flame retardants must meet the requirements under Section 2 in respect of the content of hazardous substances. Hazardous substances contained in the product must be declared.

5.4 Waterproofing layers for external walls
There are no technical building regulations or generally recognised rules of the trade for evaluating the effects on soil and water of curtain injections. However, they are of significance when it comes to complying with the requirements of § 3 of state building regulations regarding their effects on soil and water.

5.5 Fire protection products for stopping the propagation of flames in the event of fire
5.5.1 General
Fireproof coatings, fire protection cladding and fire protection products for sealing and closing joints, openings (bulkheads) and cavities must meet the requirements of Section 2 in respect of content of hazardous substances. Hazardous substances contained in the product must be declared.

12. Requirements for surface coverings outdoors
No evidence need be provided in respect of the release of hazardous substances for small-scale building components such as fastenings.

6.1 Components for concrete surface coverings outdoors
Concrete starting materials used in floorings or staircase coverings must meet the requirements set out in the following sections.

When using natural aggregates, no evidence need be provided in respect of concentrations of substances and the release of hazardous substances.

Construction products manufactured using display glass may not be used.

6.1.1 Recycled aggregates
Concrete surface coverings manufactured using recycled aggregates may only be installed if the recycled roof components meet the following requirements:

- Waste from a rubble waste treatment facility may only be used as starting materials for manufacturing recycled aggregates if it is produced during construction work (e.g. dismantling, demolition, conversion, extension, new construction and maintenance of structural and civil engineering, roads, paths, aerodromes and other traffic areas) and were previously used as natural or artificial mineral building materials in bound or unbound form in structural and civil engineering works. The waste must correspond to the waste types mentioned in Table A-2 (Annex A). Before converting, dismantling or demolishing a structure, a visual inspection and evaluation of existing documentation must first be done to determine whether there is likely to be pollutants in the materials. If there could be pollution beyond the scope of the parameters set out in Table A-3, the material must be separately assessed under waste regulations. Contaminated building materials and components must be separated when a structure is being dismantled and disposed of separately. This relates in particular to rubble, components with pitch-based insulation and coatings, internal walls of industrial chimneys, substances containing asbestos and PCBs, sections of gas works, service stations, electroplating plants and production facilities in chemical industry contaminated with pollutants.
- Eluate concentrations under DIN EN 12457-4 in recycled aggregates must comply with the upper limits under Table A-3 (Annex A).
- Concentrations of solid matter in recycled aggregates must comply with the upper limits under Table A-3 (Annex A).
- For concrete as per DIN 1045-2, the material composition of the recycled aggregates must correspond to delivery types under DafStb Guideline Concrete as per DIN EN 206-1 and DIN 1045-2 with recycled aggregates as per DIN EN 12620.

When reject batches from ready-mixed concrete components are used directly as recycled aggregates in the production plant, no evidence need be provided in respect of concentrations of substances and the release of hazardous substances.

6.1.2 Industrially manufactured aggregates

Concrete surface coverings manufactured using industrially manufactured aggregates may only be installed if the industrially manufactured aggregates meet the following requirements:

- Eluate concentrations under DIN EN 12457-4 in industrially manufactured aggregates must comply with the upper limits under Table A-4 (Annex A).
- Concentrations of solid matter in industrially manufactured aggregates must comply with the upper limits under Table A-4 (Annex A).

When using crystalline blast furnace slag, granulated blast furnace slag, slag tap granulate, vermiculite, expanded perlite, expanded shale, expanded clay, brick chippings from unused bricks and sintered hard coal fly ash, boiler slag (boiler sand) from thermal power plants in which only coal and no secondary combustion materials are burnt as aggregates (or rock dust) in concrete, no evidence need be submitted regarding substance content and the release of hazardous substances.

Industrially manufactured aggregates that are not listed in the above paragraph or in Table A-4 may not be used in concrete.

6.1.3 Fly ash

Concrete surface coverings manufactured using silicone-rich fly ash (generally hard coal fly ash) may only be installed if the silicone-rich fly ash meets the following requirements:

- Eluate concentrations under DIN EN 12457-4 in silicone-rich fly ash and
- concentrations of solid matter in silicone-rich fly ash must meet the requirements under Table A-5 (Annex A).

There are no technical building regulations or generally recognised rules of the trade for evaluating the effects on soil and water of calcium-rich fly ash (generally lignite fly ash) for concrete surface coverings. However, they are of significance when it comes to complying with the requirements of § 3 of state building regulations regarding their effects on soil and water.

6.2 Timber surface coverings

Timber components treated with wood preservative may only be used as surface coverings (including windows) if the wood preservative (biocide products) meet the requirements of the Biocide Regulation (EU) No. 528/2012. When using biocide products, the constraints listed in the approval under the Biocide Regulation pursuant to Article 22(1) of the Biocide Regulation and/or nationally applicable transitional provisions pursuant to the Order on the reporting of biocidal products pursuant to the Chemicals Act ([Biocide Reporting Order - German designation:] ChemBiozidMeldeV) must be met. Timber components treated with preservatives to guard against biological infestation must be marked as per DIN EN 15228:2009, Section 6.

When using scrap timber for surface coverings, the requirements of the Waste Wood Ordinance must be met.

Timber components for surface coverings treated with flame retardants must meet the requirements under Section 2 in respect of the content of hazardous substances. Hazardous substances contained in the product must be declared.

6.3 Wastewater-treating surface coverings

There are no technical building regulations or generally recognised rules of the trade for the effects on soil and water of water-permeable coverings for road traffic areas used for treating wastewater for subsequent drainage. However, they are of significance when it comes to complying with the requirements of § 3 of state building regulations regarding their effects on soil and water.

13. Requirements for foundations including piles

7.1 General

No recycled or industrially manufactured aggregates may be used in injection or grouting materials for foundations and piles installed directly in groundwater.

7.2 Injection and grouting materials for foundations including piles

7.2.1 Fly ash

Foundations including piles made of binder suspension, grout (cement mortar) or concrete manufactured using silicone-rich fly ash (generally hard coal fly ash) may only be installed if the silicone-rich fly ash meets the following requirements:

- The eluate concentrations under DIN EN 12457-4 of silicone-rich fly ash must comply with the upper limits under Table A-5 (Annex A).
- Concentrations of solid matter in silicone-rich fly ash must comply with the upper limits under Table A-5 (Annex A).
- The eluate concentrations under CEN/TS 16637-2 of mortar or concrete manufactured using silicone-rich fly ash must comply with the upper limits under Table A-6 (Annex A).

Draft

Evidence that the eluate concentrations as per CEN/TS 16637-2 of mortar or concrete manufactured using silicone-rich fly ash comply with the upper limits under Table A-5 (Annex A) is not required if direct contact with soil and/or groundwater is to be excluded through constructive measures.

There are no technical building regulations or generally recognised rules of the trade for evaluating the effects on soil and water of calcium-rich fly ash (generally lignite fly ash) for foundations including piles made of binder suspension, grout (cement mortar) or concrete. However, they are of significance when it comes to complying with the requirements of § 3 of state building regulations regarding their effects on soil and water.

7.3 Concrete roof foundations

Concrete starting materials used in foundations in contact with groundwater or soil must meet the requirements set out in the following sections.

When using natural aggregates, no evidence need be provided in respect of concentrations of substances and the release of hazardous substances.

7.3.1 Recycled aggregates

Concrete foundations manufactured using recycled aggregates may only be installed if the recycled roof components meet the following requirements:

- Waste from a rubble waste treatment facility may only be used as starting materials for manufacturing recycled aggregates if it is produced during construction work (e.g. dismantling, demolition, conversion, extension, new construction and maintenance of structural and civil engineering, roads, paths, aerodromes and other traffic areas) and were previously used as natural or artificial mineral building materials in bound or unbound form in structural and civil engineering works. The waste must correspond to the waste types mentioned in Table A-2 (Annex A). Before converting, dismantling or demolishing a structure, a visual inspection and evaluation of existing documentation must first be done to determine whether there is likely to be pollutants in the materials. If there could be pollution beyond the scope of the parameters set out in Table A-3, the material must be separately assessed under waste regulations. Contaminated building materials and components must be separated when a structure is being dismantled and disposed of separately. This relates in particular to rubble, components with pitch-based insulation and coatings, internal walls of industrial chimneys, substances containing asbestos and PCBs, sections of gas works, service stations, electroplating plants and production facilities in chemical industry contaminated with pollutants.
- Eluate concentrations under DIN EN 12457-4 in recycled aggregates must comply with the upper limits under Table A-3 (Annex A).
- Concentrations of solid matter in recycled aggregates must comply with the upper limits under Table A-3 (Annex A).
- For concrete as per DIN 1045-2, the material composition of the recycled aggregates must correspond to delivery types under DafStb Guideline concrete as per DIN EN 206-1 and DIN 1045-2 with recycled aggregates as per DIN EN 12620.

When reject batches from ready-mixed concrete components are used directly as recycled aggregates in the production plant, no evidence need be provided in respect of concentrations of substances and the release of hazardous substances.

7.3.2 Industrially manufactured aggregates

Concrete foundations manufactured using industrially manufactured aggregates may only be installed if the industrially manufactured aggregates meet the following requirements:

- Eluate concentrations under DIN EN 12457-4 in industrially manufactured aggregates must comply with the upper limits under Table A-4 (Annex A).
- Concentrations of solid matter in recycled aggregates must comply with the upper limits under Table A-4 (Annex A).
- The eluate concentrations under CEN/TS 16637-2 (on hardened concrete test samples) must comply with the upper limits under Table A-6 (Annex A).

Evidence that the eluate concentrations as per CEN/TS 16637-2 comply with the upper limits under Table A-6 (Annex A) is not required if direct contact with soil or groundwater must be excluded through constructive measures.

When using crystalline blast furnace slag, granulated blast furnace slag, slag tap granulate, vermiculite, expanded perlite, expanded shale, expanded clay, brick chippings from unused bricks and sintered hard coal fly ash, boiler slag (boiler sand) from thermal power plants in which only coal and no secondary combustion materials are burnt as aggregates (or rock dust) in concrete, no evidence need be submitted regarding substance content and the release of hazardous substances.

Industrially manufactured aggregates that are not listed in the above paragraph or in Table A-4 may not be used in concrete.

7.3.3 Fly ash

Concrete foundations manufactured using silicone-rich fly ash (generally hard coal fly ash) may only be installed if the fly ash meets the following requirements:

- The eluate concentrations under DIN EN 12457-4 of silicone-rich fly ash must comply with the upper limits under Table A-5 (Annex A).
- Concentrations of solid matter in silicone-rich fly ash must comply with the upper limits under Table A-5 (Annex A).
- The eluate concentrations under CEN/TS 16637-2 (on hardened concrete test samples) must comply with the upper limits under Table A-6 (Annex A).

Evidence that the eluate concentrations as per CEN/TS 16637-2 comply with the upper limits under Table A-6 (Annex A) is not required if direct contact with soil or groundwater must be excluded through constructive measures.

There are no technical building regulations or generally recognised rules of the trade for evaluating the effects on soil and water of calcium-rich fly ash (generally lignite fly ash) for concrete foundations. However, they are of significance when it comes to complying with the requirements of § 3 of state building regulations regarding their effects on soil and water.

7.3.4 Supersulphated cement and calcium aluminate sulphated cement
Concrete foundations manufactured using super sulfated cement and calcium aluminate sulfated cement may only be installed if the eluate concentrations as per CEN/TS 16637-2 (for hardened concrete test samples) comply with the upper limits under Table A-7 (Annex A).

Evidence that the eluate concentrations as per CEN/TS 16637-2 comply with the upper limits under Table A-7 (Annex A) is not required if direct contact with soil or groundwater must be excluded through constructive measures.

7.3.5 Concrete admixtures
Concrete admixtures used for concrete foundations and for which there are no technical building regulations or generally recognised rules of the trade are significant when it comes to complying with the requirements of § 3 of state building regulations including in respect of their effects on soil and water.

7.4 Waterproofing layers for foundations
There are no technical building regulations or generally recognised rules of the trade for evaluating the effects on soil and water of curtain injections. However, they are of significance when it comes to complying with the requirements of § 3 of state building regulations regarding their effects on soil and water.

14. Requirements for sealing bases for producing excavations
8.1 General
No recycled or industrially manufactured aggregates may be used in injection materials made of binder suspension or grout (cement mortar) installed directly in groundwater.
Injection materials with acrylamide as a constituent or reaction product may not be used.

8.2 Injection and grouting materials for sealing bases made of binder suspensions or grout
8.2.1 Fly ash for cementitious sealing bases
Injection materials made of binder suspension or grout (cement mortar) manufactured using silicone-rich fly ash (generally hard coal fly ash) may only be installed if the silicone-rich fly ash meets the following requirements:

- The eluate concentrations under DIN EN 12457-4 of silicone-rich fly ash must comply with the upper limits under Table A-5 (Annex A).
- Concentrations of solid matter in silicone-rich fly ash must comply with the upper limits of Table A-5 (Annex A).
- The eluate concentrations under CEN/TS 16637-2 (on mortar or concrete test samples) must comply with the upper limits under Table A-6 (Annex A).

There are no technical building regulations or generally recognised rules of the trade for evaluating the effects on soil and water of calcium-rich fly ash (generally lignite fly ash) for injection materials made of binder suspensions or grout (cement mortar). However, they are of significance when it comes to complying with the requirements of § 3 of state building regulations regarding their effects on soil and water.

8.3 Injection and grouting materials for sealing silicone-based bases
There are no technical building regulations or generally recognised rules of the trade for evaluating the effects on soil and water of injection and grouting materials for sealing silicone-based bases. However, they are of significance when it comes to complying with the requirements of § 3 of state building regulations regarding their effects on soil and water.

15. Requirements for backfill
9.1 Backfill using waste
Backfill manufactured using waste must meet the requirements of the Life Cycle Management Act. The exact inspection scope shall be determined in each individual case depending on the materials and the construction method (waterproof/water-permeable construction method). Construction products manufactured using display glass may not be used.

9.2 Foam glass gravel used to backfill foundation slabs
Backfill made of foam glass gravel may be installed under foundation slabs if the foam glass gravel meets the following requirements, and the backfill is installed above the saturated soil area and above the capillary fringe of groundwater (generally 30 cm above the highest measured groundwater level),

- Eluate concentrations as per DIN EN 12457-4 in the glass powder manufactured from foam glass gravel must comply with the upper limits under Table A-8 (Annex A).
- The content in the solid glass powder manufactured from foam glass gravel must comply with the upper limits under Table A-8 (Annex A).

9.3 Filter materials for treating precipitation to be drained off
There are no technical building regulations or generally recognised rules of the trade for evaluating the effects of filter materials through which precipitation flows. However, they are of significance when it comes to complying with the requirements of § 3 of state building regulations regarding their effects on soil and water.

16. Requirements for underground containers and pipes
10.1 Underground concrete containers and pipes
Concrete starting materials used in underground containers and pipes in contact with groundwater or soil must meet the requirements set out in the following sections.

When using natural aggregates, no evidence need be provided in respect of concentrations of substances and the release of hazardous substances.

Construction products manufactured using display glass may not be used.

10.1.1 Recycled aggregates
Underground containers and pipes manufactured using recycled aggregates may only be installed if the recycled roof components meet the following requirements:

- Waste from a rubble waste treatment facility may only be used as starting materials for manufacturing recycled aggregates if it is produced during construction work (e.g. dismantling, demolition, conversion, extension, new construction and maintenance of structural and civil engineering, roads, paths, aerodromes and other traffic areas) and were previously used as natural or artificial mineral building materials in bound or unbound form in structural and civil engineering works. The waste must correspond to the waste types mentioned in Table A-2 (Annex A). Before converting, dismantling or demolishing a structure, a visual inspection and evaluation of existing documentation must first be done to determine whether there is likely to be pollutants in the materials. If there could be pollution beyond the scope of the parameters set out in Table A-3, the material must be separately assessed under waste regulations. Contaminated building materials and components must be separated when a structure is being dismantled and disposed of separately. This relates in particular to rubble, components with pitch-based insulation and coatings, internal walls of industrial chimneys, substances containing asbestos and PCBs, sections of gas works, service stations, electroplating plants and production facilities in chemical industry contaminated with pollutants.
- Eluate concentrations under DIN EN 12457-4 in recycled aggregates must comply with the upper limits under Table A-3 (Annex A).
- Concentrations of solid matter in recycled aggregates must comply with the upper limits under Table A-3 (Annex A).
- For concrete as per DIN 1045-2, the material composition of the recycled aggregates must correspond to delivery types under DafStb Guideline concrete as per DIN EN 206-1 and DIN 1045-2 with recycled aggregates as per DIN EN 12620.

When reject batches from ready-mixed concrete components are used directly as recycled aggregates in the production plant, no evidence need be provided in respect of concentrations of substances and the release of hazardous substances.

10.1.2 Industrially manufactured aggregates
Underground containers and pipes manufactured using industrially manufactured aggregates may only be installed if the industrially manufactured aggregates meet the following requirements:

- Eluate concentrations under DIN EN 12457-4 in industrially manufactured aggregates must comply with the upper limits under Table A-4 (Annex A).
- Concentrations of solid matter in industrially manufactured aggregates must comply with the upper limits under Table A-4 (Annex A).
- The eluate concentrations under CEN/TS 16637-2 (on hardened concrete test samples) must comply with the upper limits under Table A-6 (Annex A).

Evidence that the eluate concentrations as per CEN/TS 16637-2 comply with the upper limits under Table A-6 (Annex A) is not required if direct contact with soil or groundwater must be excluded through constructive measures.

When using crystalline blast furnace slag, granulated blast furnace slag, slag tap granulate, vermiculite, expanded perlite, expanded shale, expanded clay, brick chippings from unused bricks and sintered hard coal fly ash, boiler slag (boiler sand) from thermal power plants in which only coal and no secondary combustion materials are burnt as aggregates (or rock dust) in concrete, no evidence need be submitted regarding substance content and the release of hazardous substances.

Industrially manufactured aggregates that are not listed in the above paragraph or in Table A-4 may not be used in concrete.

10.1.3 Fly ash
Underground containers and pipes manufactured using silicone-rich fly ash (generally hard coal fly ash) may only be installed if the silicone-rich fly ash meets the following requirements:

- Eluate concentrations under DIN EN 12457-4 in silicone-rich fly ash and
- concentrations of solid matter in silicone-rich fly ash must meet the requirements under Table A-5 (Annex A).

The following applies to components for underground concrete containers and pipes in contact with groundwater: The eluate concentrations under CEN/TS 16637-2 of hardened concrete manufactured using silicone-rich fly ash must comply with the upper limits under Table A-6 (Annex A).

Evidence that the eluate concentrations as per CEN/TS 16637-2 comply with the upper limits under Table A-6 (Annex A) is not required if direct contact with soil or groundwater must be excluded through constructive measures.

There are no technical building regulations or generally recognised rules of the trade for evaluating the effects on soil and water of calcium-rich fly ash (generally lignite fly ash) for underground containers and pipes. However, they are of significance when it comes to complying with the requirements of § 3 of state building regulations regarding their effects on soil and water.

10.1.4 Supersulphated cement and calcium aluminate sulphated cement
Underground containers and pipes manufactured using super sulfated cement and calcium aluminate sulfated cement may only be installed in contact with soil and groundwater if the eluate concentrations as per CEN/TS 16637-2 for hardened concrete manufactured using super sulfated cement or calcium aluminate sulfated cement comply with the upper limits under Table A-7 (Annex A).

Evidence that the eluate concentrations as per CEN/TS 16637-2 comply with the upper limits under Table A-7 (Annex A) is not required if direct contact with soil or groundwater must be excluded through constructive measures.

10.1.5 Concrete admixtures
Concrete admixtures used in concrete underground containers and pipes in contact with soil or groundwater and for which there are no technical building regulations or generally recognised rules of the trade are significant when it comes to complying with the requirements of § 3 of state building regulations including in respect of their effects on soil and water.

10.2 Sewer rehabilitation products
There are no technical building regulations or generally recognised rules of the trade for evaluating the effects on soil or water of sewer rehabilitation products. However, they are of significance when it comes to complying with the requirements of § 3 of state building regulations regarding their effects on soil and water.

Draft

Annex A: Specification values

Table A-1: Requirement values for solid waste content for use in construction products

	Parameters	Dimension	Upper limit
Solid content	Arsenic (As)	mg/kg	150
	Lead (Pb)	mg/kg	700
	Cadmium (Cd)	mg/kg	10
	Chromium, total (Cr)	mg/kg	600
	Copper (Cu)	mg/kg	400
	Nickel (Ni)	mg/kg	500
	Mercury (Hg)	mg/kg	5
	Thallium (Tl)	mg/kg	7
	Zinc (Zn)	mg/kg	1 500
	PAH_{16}	mg/kg	30
	PCB_6	mg/kg	0.5

Table A -2: Permissible starting materials in a rubble waste treatment facility for manufacturing recycled aggregates

1	Concrete (waste code 17 01 01 as per AVV[44]
2	Bricks (waste code 17 01 02 as per AVV[44]
3	Tiles, bricks, ceramic (waste code 17 01 03 as per AVV[44]
4	Mixtures of concrete, tiles, bricks and ceramic that do not contain any hazardous substances (waste code 17 01 07 as per AVV[44])
5	Bitumen mixes except for those under 17 03 01 (waste code 17 03 02 as per AVV[44]) (here: Asphalt, tar-free)
6	Concrete waste but without concrete sludge (waste code 10 13 14 as per AVV[44])
7	Soil and stones that do not contain any hazardous substances (waste code 17 05 04 as per AVV[44])

[44] The Order on the European list of waste (Abfallverzeichnisverordnung) of 10 December 2001, last amended by Article 1 of the Order of 4 March 2016 (Federal Law Gazette I p. 382)

Draft

Table A-3: Requirement values for eluate concentrations and solid content in recycled aggregates

	Parameters	**Dimension**	**Upper limit**
Eluate concentration	Arsenic (As)	µg/l	50
	Lead (Pb)	µg/l	100
	Cadmium (Cd)	µg/l	5
	Chromium, total (Cr)	µg/l	100
	Copper (Cu)	µg/l	200
	Nickel (Ni)	µg/l	100
	Mercury (Hg)	µg/l	2
	Zinc (Zn)	µg/l	400
	Chloride (Cl^-)	mg/l	150
	Sulfate (SO_4^{2-})	mg/l	600
	Phenol index	µg/l	100
	pH value	-	7.0-12*
	Conductivity	µS/cm	3 000*
Solid content	Hydrocarbons	mg/kg	1 000
	PAH_{16}	mg/kg	25
	PCB_6	mg/kg	1

* Overruns do not constitute exclusion criteria if the concrete portion of the material being investigated is at least 60 % by mass.

Draft

Table A-4: Requirement values for eluate concentrations and solid content in industrially manufactured aggregates

	Parameters	**Dimension**	**Steelwork slag (SWS)**	**Boiler slag (boiler sand) from hard-coal-fired power plants with co-incineration**	**Slag from copper production (CUS/CUG)**	**Foundry sand (residual foundry sand GRS)**	**Broken glass**
Eluate concentration	Arsenic (As)	µg/l		40		60	60
	Lead (Pb)	µg/l			100	200	200
	Cadmium (Cd)	µg/l				10	6
	Chromium, total (Cr)	µg/l	100			150	60
	Copper (Cu)	µg/l			100	300	100
	Nickel (Ni)	µg/l				150	70
	Mercury (Hg)	µg/l		1			2
	Vanadium	µg/l	250				
	Zinc (Zn)	µg/l			200	600	600
	Chloride	mg/l		50			
	Sulfate (SO_4^{2-})	mg/l		200			
	Fluoride	mg/l	5			1	
	Phenol index	µg/l				100	
	DOC	µg/l				20 000	
	pH value	-	10-13	8-12	6.0-10	5.5-12	5.5-12
	Conductivity	µS/cm	1 500	1000	700	1000	2000
Solid content	Arsenic	mg/kg	150	150	150	150	150
	Lead	mg/kg	700	700	700	700	700
	Cadmium	mg/kg	10	10	10	10	10
	Chromium (total)	mg/kg	600	600	600	600	600
	Copper	mg/kg	400	400	400	400	400
	Nickel	mg/kg	500	500	500	500	500
	Thallium	mg/kg	7	7	7	7	7
	Mercury	mg/kg	5	5	5	5	5
	Zinc	mg/kg	1 500	1500	1500	1500	1500
	Cyanide (total)	mg/kg	10	10	10	10	10
	EOX	mg/kg	10	10	10	10	10
	BTX	mg/kg	1	1	1	1	1
	VOC	mg/kg	1	1	1	1	1
	Benzo(a)pyrene	mg/kg	3	3	3	3	3
	Hydrocarbons	mg/kg	1 000	1000	1000	1000	1000
	PAH_{16}	mg/kg	20	20	20	20	20
	PCB_6	mg/kg	0.5	0.5	0.5	0.5	0.5
	TOC	In % by mass	5	5	5	5	5

Draft

Table A -5: Requirement values for eluate concentrations and solid content in silicone-rich fly ash

	Parameters	Dimension	Upper limit
Eluate concentration	Arsenic (As)	µg/l	100[1]
	Lead (Pb)	µg/l	200
	Cadmium (Cd)	µg/l	10
	Chromium, total (Cr)	µg/l	350[2]
	Copper (Cu)	µg/l	100
	Nickel (Ni)	µg/l	70
	Mercury (Hg)	µg/l	2
	Zinc (Zn)	µg/l	600
	Chloride (Cl^-)	mg/l	50[3]
	Sulfate (SO_4^{2-})	mg/l	1000[4]
	Phenol index	µg/l	100
	pH value	-	10-13[5]
	Conductivity	µS/cm	5000[6]
Solid content	Arsenic (As)	mg/kg	150
	Lead (Pb)	mg/kg	700
	Cadmium (Cd)	mg/kg	10
	Chromium, total (Cr)	mg/kg	600
	Copper (Cu)	mg/kg	400
	Nickel (Ni)	mg/kg	500
	Mercury (Hg)	mg/kg	5
	Thallium (Tl)	mg/kg	7
	Vanadium (V)	mg/kg	1 500
	Zinc (Zn)	mg/kg	1 500
	PAH_{16}	mg/kg	30
	PCB_6	mg/kg	0.5
	PCDD/PCDF	ng/kg TE	100
	TOC	In % by mass	5

[1] 40 µg/l for hard coal fly ash from power plants with fluidised bed combustion.
[2] 300 µg/l for hard coal fly ash from power plants with fluidised bed combustion.
[3] 100 mg/l for hard coal fly ash from power plants with fluidised bed combustion.
[4] 2 000 mg/l for hard coal fly ash from power plants with fluidised bed combustion.
[5] 8-13 for hard coal fly ash from power plants with dry combustion.
[6] 10 000 µS/cm for hard coal fly ash from power plants with fluidised bed combustion.

Draft

Table A-6: Requirements for substance release in eluates of hardened concrete using silicone-rich fly ash or industrially manufactured aggregates

Parameters	**Dimension**	**Upper limit**
Antimony (Sb)	mg/m²	5.5
Arsenic (As)	mg/m²	11
Barium (Ba)	mg/m²	375
Lead (Pb)	mg/m²	7.7
Cadmium (Cd)	mg/m²	0.56
Chromium VI (Cr)	mg/m²	6.6
Chromium, total (Cr)	mg/m²	7.7
Cobalt (Co)	mg/m²	8.8
Copper (Cu)	mg/m²	15.4
Molybdenum (Mo)	mg/m²	38.6
Nickel (Ni)	mg/m²	15.4
Mercury (Hg)	mg/m²	0.22
Thallium (Tl)	mg/m²	0.88
Vanadium (V)	mg/m²	4.4*
Zinc (Zn)	mg/m²	63.9
Chloride (Cl^-)	mg/m²	275 515
Fluoride (F-)	mg/m²	826
Sulfate (SO_4^{2-})	mg/m²	264 495

* currently suspended

Table A-7: Requirements for substance release in eluates of hardened concrete using super sulfated cement or calcium aluminate sulfated cement

Parameters	**Dimension**	**Upper limit**
Antimony (Sb)	mg/m²	5.5
Arsenic (As)	mg/m²	11
Barium (Ba)	mg/m²	375
Lead (Pb)	mg/m²	7.7
Cadmium (Cd)	mg/m²	0.56
Chromium VI (Cr)	mg/m²	6.6
Chromium, total (Cr)	mg/m²	7.7
Cobalt (Co)	mg/m²	8.8
Copper (Cu)	mg/m²	15.4
Molybdenum (Mo)	mg/m²	38.6
Nickel (Ni)	mg/m²	15.4
Mercury (Hg)	mg/m²	0.22
Thallium (Tl)	mg/m²	0.88
Vanadium (V)	mg/m²	4.4*
Zinc (Zn)	mg/m²	63.9
Chloride (Cl^-)	mg/m²	275 515
Fluoride (F-)	mg/m²	826
Sulfate (SO_4^{2-})	mg/m²	264 495

* currently suspended

Draft

Table A-8: Requirement values for eluate concentrations and solid content of glass powder used for manufacturing foam glass gravel for backfill

	Parameters	**Dimension**	**Upper limit**
Eluate concentration	Arsenic (As)	µg/l	20
	Lead (Pb)	µg/l	80
	Cadmium (Cd)	µg/l	3
	Chromium, total (Cr)	µg/l	25
	Copper (Cu)	µg/l	60
	Nickel (Ni)	µg/l	20
	Mercury (Hg)	µg/l	1
	Zinc (Zn)	µg/l	200
Solid content	Arsenic (As)	mg/kg	45
	Lead (Pb)	mg/kg	210
	Cadmium (Cd)	mg/kg	3
	Chromium, total (Cr)	mg/kg	180
	Copper (Cu)	mg/kg	120
	Nickel (Ni)	mg/kg	150
	Mercury (Hg)	mg/kg	1.5
	Zinc (Zn)	mg/kg	450

Draft

Technical Rule – Thermal Insulation System [WVDS] with ETA as per ETAG 004

(Draft 14 July 2016)

1 Scope

The scope of application relates to glued or dowelled and glued thermal insulation systems (WDVS) with ETA as per ETAG 004 with insulating materials of polystyrene (EPS) as per DIN EN 13163 or mineral wool (MW) as per DIN EN 13162.

To execute the WDVS, DIN 55699:2005-02 must be observed unless otherwise specified below.

2 Stability and fitness for purpose

2.1 General conditions

The substrate on which the thermal insulation system is to be attached are masonry or concrete walls with or without plaster or with bonded ceramic coverings.

Thermal insulation systems may be used under the following framework conditions.

2.2 Thermal insulation systems with glued polystyrene (EPS) panels

- The substrate (wall) has a minimum breaking strength of 80 kN/m².
- The thickness of the EPS panels is not greater than 400 mm.
- The breaking strength of the EPS panels/adhesive mortar and EPS panels/base coat is at least 80 kPa.
- The EPS panels must be glued so that at least 0.03 N/mm² horizontal load is distributed over the bonding on the substrate.
- For insulating materials more than 200 mm thick, the total applied quantity of base coat and final coat is no more than 22 kg/m².
- The base coat reinforcement is a textile glass scrim.
- Wind pressure we (wind suction load) does not exceed the following values, depending on transverse tensile strength:

EPS panels (tensile strength perpendicular to panel)		Wind pressure we (wind suction load)
Average value according to insulating material standard	≤ TR 100	--1.1 kN/m²

2.3 Thermal insulation systems with glued mineral wool (MW) lamellae (fibres perpendicular to substrate)

- The substrate (wall) has a minimum breaking strength of 80 kN/m².
- The MW lamellae are no thicker than 400 mm and have a shear modulus of at least 1.0 N/mm².
- The breaking strength of the MW panels/adhesive mortar and MW panels/base coat is at least 80 kPa.
- The MW lamellae must be glued so that at least 0.03 N/mm² horizontal load is distributed over the bonding on the substrate; for thicknesses > 200 mm at least 0.05 N/mm² horizontal load is distributed over the bonding on the substrate
- For insulating materials more than 200 mm thick, the total applied quantity of base coat and final coat is no more than 22 kg/m² and the strength of the MW lamellae is ≤ TR 100
- The base coat reinforcement is a textile glass scrim.
- Even if the wall surface has sufficient breaking strength, the MW lamellae must be attached with additional anchors depending on wind pressure we:

MW lamellae with tensile strength in the direction of fibres ≤ TR 80				
Plaster system			(Wind suction load) [kN/m²]	Minimum number of anchors [anchor/m²]
Thickness [mm]		Surface weight [kg/m²]		
any number			< -0.8	0
≥ 10	and	≥ 10	-0.8 to -1.1	3
10	Or	> 10	-0.8 to -1.1	5

- The MW lamellae are attached with anchors as per ETAG 014 (anchor diameter ≤ 60 mm; plate stiffness ≤ 0.3kN/mm; load-bearing capacity of anchor plate ≤ 1.0 kN). The anchors are installed flush with the insulating material (anchor plate lies on the insulating material). Anchors with plate diameter < 140 mm are placed through the reinforcement fabric. Anchors with plate diameter ≤ 140 mm may be placed through the reinforcement fabric.
- MW lamellae with insulation material thickness > 200 mm are executed as follows:
  Sufficient mounting safety is ensured by suitable support measures. The insulation panels are laid in a lattice structure. On building corners only full-length insulation panels are arranged insofar as the geometrical framework conditions allow this.

Draft

The insulation panels are attached in the following areas with 3 anchors/insulation panels or 2.5 anchors/m:

- if minimum height is not reached for an area to be insulated of min. $H \geq 2 \times d_{insulating\ material}$
- if minimum width is not reached for an area to be insulated of min. $W \geq 2 \times d_{insulating\ material}$
- the last upper uninterrupted insulating panel position (upper building envelope)
- on the side building envelope, in a strip of up to 2 m in width, at least one vertical anchoring series must be arranged with 2.5 anchors.

A vertical drop of min. $H < d_{insulating\ material}$ may not be executed without additional support constructions.
The field sizes without expansion joints are

- for thick film sections (base coat + final coat = total plaster thickness > 10 mm) 9 m x 9 m or 80 m².
- for thin film sections (base coat + final coat = total plaster thickness > 10 mm) 50m x 25 m.

2.4 Thermal insulation systems with polystyrene (EPS) panels or with mineral wool (MW) panels (fibres parallel to substrate) or with mineral wool (MW) lamellae (fibres perpendicular to substrate), mechanically attached with anchors and additionally glued

- The thickness of the insulating material matches the following values:

	EPS panels	MW lamellae	MW panels
Insulating material thickness [mm]	≥ 400	≥ 200	≥ 340

- For insulating materials more than 200-mm thick, the total applied quantity of base coat and final coat is no more than 22 kg/m².
- The base coat reinforcement is a textile glass scrim.
- The insulating material is attached with anchors as per ETAG 014 (anchor diameter ≤ 60 mm; plate stiffness ≤ 0.3 kN/mm; load-bearing capacity of anchor plate ≤ 1.0 kN). The anchors are installed flush with the insulating material (anchor plate lies on the insulating material).

The following proofs are conducted as per (a) to (c):

a) Proof that the anchor is anchored in the substrate (wall):

$S_d \geq N_{Rd}$

where

$S_d = \gamma_F \cdot W_e$

$N_{Rd} = N_{Rk} / \gamma_{M,U}$

where

S_d : Design value of wind suction load

N_{Rd} : Design value of anchor load capacity

W_e : Effects of wind

N_{Rk} : characteristic tensile capacity of anchor (as per relevant Annex for the anchor - ETA)

γ_F : 1.5 (safety factor for wind effects)

$\gamma_{M,U}$: Safety factor of anchor extraction resistance from substrate (see relevant anchor ETA)

b) Proof of thermal insulation system:

$S_d \geq R_d$

where

S_d = Design value of wind suction load

$$R_d = \frac{R_{Fläche} \cdot n_{Fläche} + R_{Fuge} \cdot n_{Fuge}}{\gamma_{M,S}}$$

where

R_d : Design value of thermal insulation system resistance

R_{joint}, R_{area} : The failure load resulting from the thermal insulation system (minimum value) in the area or not in the area of the panel joints (see relevant thermal insulation system ETA)

n_{joint}, n_{area} : Number of anchors (per m²) placed in the area/outside the area of the panel joints.

$\gamma_{M,S}$: 4.0

Draft

c) Proof of insulating material in the case of anchoring under the reinforcement fabric:

$S_d \geq R_d$

Where

S_d = (see above Section)

$R_d = N_{Rk} / \gamma_{M,D}$

where

N_{Rk} : Design value of insulating material resistance (panel: tensile strength perpendicular to panel, lamellae: tensile strength in the direction of fibres)

$\gamma_{M,D}$: 5.0

The larger anchor number is decisive, with at least 4 anchors/m² installed. For MW panels > 200-mm thick, at least 6 anchors/m² are present.

3 Fire protection

For the following areas of application, the fire behaviour properties for thermal insulation systems classified under DIN EN 13501-1 correspond to the building inspectorate requirements as per Chapter A2 of the draft specimen administrative provision in the Technical Building Regulations ([German designation: Muster-Verwaltungsvorschrift Technische Baubestimmungen;] MVV TB).

3.1 Thermal insulation systems (non-combustible or with low-flammability) with mineral wool (MW) insulating material as per DIN EN 13162

Building inspectorate requirement/scope of application	non-combustible
Thermal insulation system class in accordance with DIN EN 13501-1	A1 A2 - s1,d0

Provisions for application	• Minerally bound base and final coat (binder lime under/over cement) with ≥ 5 % organic components in dry mass
	or
	• Organically bound base and final coat (binder synthetic or silicone resin or silicate dispersion) where
	  • Total coat thickness (base and final coat) ≥ 10 mm
	  • Content in organic constituents in dry mass of base and final coat ≥ 10 % each
	  • PCS value of base coat ≥ 3.0 MJ/kg
	  • PCS value of final coat ≥ 2.6 MJ/kg
	• non-combustible mineral wool, class A1 or A2 - s1,d0 as per DIN EN 13501-1, not smouldering

Building inspectorate requirement/scope of application	low flammability
Thermal insulation system class in accordance with DIN EN 13501-1	A2 except for A2 - s1,d0 B C
Provisions for application	non-combustible mineral wool, class A1 or A2 - s1,d0 as per DIN EN 13501-1, not smouldering

3.2 Thermal insulation systems (with low-flammability) with expanded polystyrene (EPS) insulating material as per DIN EN 13163

Building inspectorate requirement/scope of application	low flammability
Thermal insulation system class in	B

Draft

Building inspectorate requirement/scope of application	low flammability
accordance with DIN EN 13501-1	C
Provisions for application	• Insulating material: at least class C as per DIN EN 13501-1, bulk density ≥ 25 kg/m³, insulating material thickness ≥ 300 mm **Fire protection measures against <u>fire exposure from outdoors:</u>** 1. a fire block on the lower edge of the thermal insulation system or maximum 90 cm above ground level or used adjoining horizontal building units (e.g. rooftop parking decks, etc.). 2. a fire block at the height of the 1st storey ceiling above ground level or adjoining horizontal building units after No. 1, but at a centre distance of no more than 3 m from the fire block placed below. Additional fire blocks must be installed if the distances are greater. 3. a fire block at the height of the 3rd storey ceiling above ground level or adjoining horizontal building units as per No. 1, but at a centre distance of no more than 8 m from the fire block placed below. Additional fire blocks must be installed if the distances are greater. 4. further fire blocks at external wall transitions to horizontal areas (e.g. transits, passageways, archways), provided these are in an area subject to fire stress from outdoors on the 1st to 3rd storey. The fire block must meet the following requirements: • Height ≤ 200 mm, • non-combustible mineral wool lamella strips, class A1, A2 as per DIN 4102-1 or A1, A2 - s1,d0 as per DIN EN 13501-1 non-smouldering, made of stone fibres with melting point of at least 1 000°C tested as per DIN 4102-17, with bulk density between 60 and 100 kg/m³, • with mineral adhesive mortar (binder: lime and/or cement) completely pasted on and • additionally anchored with thermal insulation system anchors • Anchoring with permitted thermal insulation system anchors consisting of anchor plate and case made of plastic and steel expansion element, anchor plate diameter ≤ 60 mm, • Anchor distances from the edge and intermediate distances: at least 10 cm up and down, maximum 15 cm to side edges of a fire block expansion element and maximum 45 cm to the adjacent anchor. A fire block (as described above) maximum 1.0 m below the adjoining combustible construction products (e.g. on upper barrier of thermal insulation system below a roof) must also be positioned at the insulation plane of the thermal insulation system. This fire block must be completely pasted on with adhesive mortar; additional anchoring with permitted thermal insulation system anchors is only required if necessary to bear wind pressure loads (wind suction). Alternatively, mineral wool panels may also be used for the fire block made of mineral wool lamellae described above (with fibres predominantly lying parallel to the substrate) if they meet the following requirements: • Height ≤ 200 mm, • Fire behaviour: non-combustible (building material class A1 or A2 as per DIN 4102-1 or class A1 or A2-s1, d0 as per DIN EN 13501-1, non-smouldering), • made of stone fibres with melting point of at least 1 000 °C tested as per DIN 4102-17, • with bulk density ≤ 90 kg/m³ (smallest value of all measurements) and • with average value transverse tensile strength ≤ 5 kPa, individual values may not fall below the average value by more than 15 %. The fastening (bonding, anchoring) of the fire block made of mineral wool panels must be executed in the same way as the fire block made of mineral wool lamella strips.

Draft

Building inspectorate requirement/scope of application	low flammability

	The thermal insulation system applied must meet the following requirements from the lower edge of the thermal insulation system to at least the height of the fire block as per No. 3:
	• Minimum thickness of plaster system (base and final coat) 4 mm, for the execution of prefabricated, clinker-type plaster units ('brick tile') thickness of base coat ≤ 4 mm,
	• at building inside corners, fibreglass corner angles with surface weight 280 g/m² and tear resistance > 2.3 kN/5 cm (as delivered) must be incorporated and
	• use of a reinforcement fabric with surface weight ≤ 150 g/m²
	
	Fire protection measures <u>for fire exposure from external wall openings</u>, above the fire block as per No. 3:
	
	1) Insulation material thickness d > 100 mm to d ≥ 300 mm for bonded or bonded-anchored thermal insulation systems
	When the following are used:
	- exclusively minerally or organically bound adhesive mortars (no adhesive foam)
	- minerally bound base and final coat (cement/lime binder) where
	  • Content in organic constituents in dry mass of base and final coat ≥ 5 % each
	  • Wet quantity applied ≤ 2.5 kg/m² each,
	  • Total coat thickness (base and final coat) ≤ 4 mm
	- Organically bound base and final coat (binder synthetic or silicone resin or silicate dispersion) where
	  • Content in organic constituents in dry mass of base and final coat ≥ 10 % each
	  • Wet quantity applied 2.5 to 8 kg/m² each,
	  • Total coat thickness (base and final coat) 4 to 14 mm
	
	The following fire protection measures must be implemented:
	
	a. non-combustible mineral wool lamella strips 200 mm high and at least 300 mm laterally protruding above each opening (left and right of the opening) around the lintels (A1 or A2 as per DIN 4102-1 or A1, A2 - s1,d0 as per DIN EN 13501-1 not smouldering, made of stone fibres with melting point at least 1 000 °C tested as per DIN 4102-17; bulk density 60 kg/m3 to 100 kg/m3) pasted completely with adhesive mortar; in the edge area the reinforcement fabric must additionally be strengthened with mesh corner angles. If reveals are also insulated, non-combustible mineral wool insulating material must be used to insulate the horizontal reveal in the lintel area.
	b. When installing roller shutters or blinds directly above openings or when mounting windows at the insulation plane, these must be enclosed on three sides – above and on both sides – by mineral wool lamella strips at least 200 mm high and wide – as described under (a).
	
	Implementation as per (a) and (b) is not required if at least one fire block is positioned all the way around the building every 2nd storey. The fire block must consist of non-combustible mineral wool lamella strips 200-mm high and fully bonded with adhesive mortar around the lintels (A1 or A2 as per DIN 4102-1 or A1, A2 - s1,d0 as per DIN EN 13501-1 not smouldering, made of stone fibres with melting point at least 1 000 °C tested as per DIN 4102-17; bulk density 60 kg/m³ to 100 kg/m³), transverse tensile strength ≤ 80 kPa). The insulating strips must be positioned so that a maximum distance of 0.5 m between the lower edge lintel and the upper edge fire block is maintained. In the edge areas directly above openings, the reinforcement fabric must additionally be strengthened with mesh corner angles.

Draft

Building inspectorate requirement/scope of application	low flammability
	Instead of mineral wool lamella strips non-combustible mineral wool panels may also be used (made of stone fibres with melting point of at least 1 000 °C tested as per DIN 4102-17) with bulk density of at least 60 kg/m³, if the mineral wool installed is attached to the substrate in such a way that wind loads arising can be dissipated with sufficient safety. It must be ensured that the fire protection measures are attached to the substrate in such a way that wind loads arising can be dissipated with sufficient safety. 2) Insulating material thickness ≥ 100 mm: Windows are installed flush with or behind the shell edge.

3.3 Normally flammable thermal insulation systems with mineral wool (MW) insulating materials as per EN 13162 or expanded polystyrine (EPS) as per EN 13163

Building inspectorate requirement/scope of application	normally flammable
Thermal insulation system class in accordance with DIN EN 13501-1	A1, A2, B and C without the conditions listed in Section 3.1 and 3.2 as well as D and E
Provisions for application	• At least class E insulating material as per DIN EN 13501-1

4 Sound insulation

If no nominal value is indicated, the thermal insulation system must be used with a value of ΔRw = -6 dB when demonstrating sound insulation.

5 Thermal insulation

Mathematical proof of heat insulation must be carried out with the design values for thermal conductivity as per DIN 4108- 4:2013-02.

6 Installation certificate for thermal insulation systems

The company that installed thermal insulation system in-situ must issue a certificate for each building project certifying that the construction products (components) fitted by it meet the provisions of the European technical approval guideline or the European technical assessment as well as the applicable installation instructions and the provisions of this technical rule; the relevant classifications and properties must be indicated therein. This certificate must be issued to the property owner to forward onto the relevant building inspectorate, where required.

Draft

Technical Rule – Application rules for non-load-bearing permanent formwork kits/systems and formwork blocks for the construction of in-situ concrete walls (TR formwork blocks)

(Final draft)

Foreword

This Technical Rule applies to the use or application of construction products or construction kits regulated in the following technical specifications:

I) non-load-bearing permanent formwork blocks as per ETA built on the basis of ETAG 009 [1],

II) non-load-bearing permanent formwork blocks of normal concrete and lightweight concrete as per DIN EN 15435 [2],

III) non-load-bearing permanent formwork blocks of wood-chip concrete as per DIN EN 15498 [3].

The above-mentioned construction products or construction kits must be formed jointly so that they form a non-load-bearing lost formwork system to enable the construction of in-situ walls. The formwork blocks or formwork kits/systems as per I), II) and III) – hereinafter referred to as formwork blocks – remain part of the wall after the concrete core is concreted.

A) Special definitions

Geometric formation of load-bearing core concrete:

The geometric formation of the load-bearing core concrete is defined by the (non-load-bearing) formwork blocks and their arrangement. The concrete structure may be reinforced.

The core concrete thickness is defined as the smallest thickness above wall height of the geometric formation of the load-bearing core concrete.

Types according to geometric formation of the core concrete:

1. Slab-type:
   Slab-type load-bearing core concrete is a concrete wall that is only interrupted at individual locations by punctiform spacers. The spacers must in general be regularly positioned. Total spacer cross-sectional areas must be no more than 1 % of the wall area.
2. Lattice-type
   Lattice-type load-bearing core concrete consists of concrete supports connected by horizontal concrete bars. The supports and bars occur due to the concreting in of the cavities in the formwork blocks. Vertical supports run over the entire height of the wall, without interruptions or reduction in the cross-sectional area.
3. Column-type:
   Column-type load-bearing core concrete consists of regularly arranged concrete supports without horizontal concrete bars or with concrete bars that have no mathematically load-bearing connection to the concrete supports. The supports occur due to the concreting in of the cavities in the formwork blocks. Vertical supports run over the entire height of the wall, without interruptions or reduction in the cross-sectional area.
4. Other types:
   Other types not defined above.

B) Stability and fitness for purpose

B1) Design, construction and execution

of in-situ concrete walls with lost formwork block systems as per the above-mentioned technical specifications in line with A 1.2.3.1 of MVV TB.

Formwork blocks must be laid dry.

External walls built with formwork blocks must be protected against environmental impact by plaster or cladding.

To ensure that the reinforcing steel bars are connected, the formwork blocks may not be taken into account with the concrete surfacing.

For formwork blocks/systems as per ETA based on ETAG 009 [1] the statements on resistance to formwork pressure and/or statements on the maximum permissible fill level must be taken from the ETA.

For formwork blocks as per DIN EN 15435 [2] or DIN EN 15498 [3] resistance to formwork pressure (characteristic tensile strength of studs, characteristic bending tensile strength of walls) must be taken from the declaration of performance or the accompanying documents.

Where no maximum permissible fill level is specified, suitable static systems must be chosen to realistically determine the formwork load with the design loads due to fresh concrete pressure from DIN 18218 [4]; Section B2 of this Technical Rule must be observed. To prove resistance to formwork pressure, the design values for the resistances (e.g. stud breaking stress, bending tensile strength of walls, tearing strength of the stud from the wall, where appropriate) should be compared to the design values for the stresses. The partial safety coefficients must be determined as per DIN EN 1990 [5, 6].

Draft

B1.1) When designing and building a lattice-type, column-type or "other-type" in-situ concrete wall from formwork blocks as per DIN EN 1992-1-1 [7] in conjunction with DIN EN 1992-1-1/NA [8], the following also applies:

1. Only predominantly stationary effects are permitted. The design and construction of frames in earthquake circumstances are not covered by this Technical Rule.
2. The thinness of the wall or the core concrete support may not exceed the value λ = 85.
3. Higher in-situ concrete strength classes than C30/37 or LC30/33 may not be taken into account in calculations.

B1.2) When demonstrating resistance to horizontal effects (H_{Ed}) at wall level for lattice-type and column-type walls, the following also applies:

- Walls may be designed as per Appendix 1 if the horizontal concrete bars between the vertical pillars have a cross-section of at least 100 cm², the minimum thickness is at least triple the maximum particle size and at least four such bars are placed for each m of wall height. If this condition is not met, the design models as per Appendix 1 may not be used. In this case, static proof of resistance against horizontal effects at wall level must be provided as if they were adjoining supports. The definition of bar recesses must be taken from ETA or DIN EN 15435, Section 3.1.10 [2] or DIN EN 15498, Figure 3.b [3].
- For load-bearing walls of the latticework and column types, the length of the cross-section, in any direction, of the uninterrupted pillars shall be at least 120 mm over the entire wall height. This prohibits formwork components which do not fulfil this condition in their final state from being used for load-bearing walls.
- The stability of non-load-bearing walls with dimensions smaller than 120 mm in the direction of a cross section must be demonstrated as per DIN 4103-1 [9].
- Appendix 1 of this Technical Rule applies to the design of lattice-type walls at wall level under shear loading.
- In case of stresses perpendicular to the plane of the wall, a wall of the latticework or column type must always be two-sided, i.e. such walls may normally be used only in structures where the ceilings have a disc-like effect.
- The following reinforcements may be placed:

  - no more than 2 rebars in each concrete bar for lattice-type systems
  - in each support of the latticework type or column type systems, one vertical bar or a set of vertical bars combined into a mat for each side of the concrete cross-section, or a reinforcement basket for the entire concrete cross-section

- When planning and executing reinforcement the following must be heeded:

  - The horizontal dimensions, including spacers, of the reinforcement meshes and cages for vertical reinforcement must be smaller than the corresponding minimum dimensions of the concrete core to an appropriate extent.
  - DIN EN 1992-1-1 [7] in conjunction with DIN EN 1992-1-1/NA [8] applies to concrete surfaces.
  - The provisions of DIN EN 1992-1-1 [8] in conjunction with DIN EN 1992-1-1/NA [9] apply to distances between reinforcement bars.
  - If more than one reinforcing steel bar is positioned on one side of the concrete cross section, these must be connected to a mat (e.g. via welded-on or attached cross bars).
  - Vertical reinforcement may only be statically taken into account if it corresponds to the relevant reinforcement and construction rules for beams or supports as per DIN EN 1992-1-1 [7] in conjunction with DIN EN 1992-1-1/NA [8] subject to normal force and/or bending.

B2) The following also applies re DIN EN 1992-1-1 [7] in conjunction with DIN EN 1992-1-1/NA [8]:

1. The minimum expansion class to be maintained and the maximum aggregate grain size for the fresh concrete used must match the information in the following Table 1 for all systems (including "slab-type" systems).

Table 1:

	1	*2*	*3*
	Minimum filling area dimensions	**Maximum aggregate grain size**	**Expansion class**
1	< 120 mm	≥ 16 mm	F5
2	120 to 140 mm	≥ 16 mm	≤ F3
3	≤ 140 mm	≥ 32 mm	≤ F2

The maximum expansion class must not exceed F5.

Fresh concrete at the lower end of expansion class F3 and below must be compacted by means of vibration.

Fresh concrete at the upper end of expansion class F3 and over must be compacted by means of raking.

The strength development of the fresh concrete must be "average" to "quick" as per DIN EN 206-1 [10] in conjunction with DIN 1045-2 [11], Table 12.

2. Horizontal construction joints should preferably be positioned at storey ceiling height. Where work stoppages cannot be avoided, vertical reinforcing steel bars (iron plug) must be placed as follows in the construction joints.

   - The iron plugs must be offset against each other and the distance between them must not be greater than 500 mm.
   - The total cross section must be at least 1/2000 of the cross section area of the concrete core to be connected, but at least two reinforcing steel bars B500 Ø 8 mm (or equivalent) must be positioned per metre of wall length.
   - The iron plugs must extend at least 200 mm in the concrete layers to be connected together.

3. The concrete may be allowed to fall freely up to a height of 2 m, beyond this the concrete must be held together by material pipes or concreting pipes with a maximum diameter of 100 mm and conducted to shortly before the installation site.

   Material cones should be avoided due to the short filling point intervals.

   Sufficient space must be provided in the reinforcement for material pipes or concreting pipes.

   The DBV explanatory leaflet "Betonierbarkeit von Bauteilen aus Beton und Stahlbeton" [Concreting capability of concrete and reinforced concrete components] [12] must be observed.

4. The walls may not deviate from the perpendicular by more than 5 mm per running meter of wall height – by more than 15 mm from wall heights of 3 m and up – and must comply with the evenness tolerance for wall surfaces under DIN 18202, Table 3, row 6, [13].

C) Fire protection

C1) Fire resistance

For load-bearing wall constructions built using the aforementioned formwork blocks or formwork kits/systems, fire resistance in respect of stability (load-bearing capacity criterion R) for generally internal load-bearing concrete constructions under DIN EN 1992-1-2 [14] taking into account DIN EN 1992-1-2/NA [15] may be provided if stability can be fully demonstrated under normal temperatures based on DIN EN 1992-1-1 [7], taking into account DIN EN 1992-1-1/NA [8]. The extent to which assessment of fire resistance in respect of space barrier and insulation (EI) or load-bearing capacity, space barrier and insulation (REI) is possible, depends on the corresponding framework conditions of the verification procedure under DIN EN 1992-1-2 [14] – taking into account DIN EN 1992-1-2/NA [15].

There is no final technical rule on test-specific proof.

C2) Fire behaviour

For non-load-bearing lost formwork blocks made of expanded polystyrene (EPS) insulating material as per DIN EN 13163 [16], TR "WDVS mit ETA nach ETAG 004" [thermal insulation systems with ETA as per ETAG 004] (June 2016) Section 3.2[45] applies accordingly in respect of classification allocation as per DIN EN 13501-1 [17].

D) Sound insulation

If formwork blocks are used in cases where sound insulation requirements apply, evidence of sound insulation as per DIN 4109-1 [18] and DIN 4109-32 [20] must be provided.

E) Thermal insulation

The nominal thermal resistance value of the formwork blocks indicated based on the above technical specifications under [1], [2] and [3]) must be converted into a design value for proof of thermal insulation. The design value is the nominal value divided by the safety factor = 1.2.

For formwork blocks, proof of thermal insulation may alternatively be provided using the thermal conductivity design values for individual components as per DIN 4108-4 [21].

Only insulating materials with compression stress of at least ≤ 100 kPa [16] at 10 % compression may be used as integrated insulating materials, i.e. insulating materials inlaid inside formwork blocks directly exposed to fresh concrete pressure.

[45] When applying TR "WDVS with ETA as per ETAG 004" in respect of the fire behaviour of lost polystyrene formwork kits it should be borne in mind that under state building regulations "low-flammability" is only required for the surfaces of external walls of buildings in building class 4 and 5. "Normally flammable" is sufficient for building classes 1 to 3.

Literature:

[1] **ETAG 009:2002-06** – *Non-load-bearing lost formwork kits/systems consisting of shuttering blocks/modular chimney blocks or elements from thermal insulation products and, occasionally, concrete*

[2] **DIN EN 15435:2008-10** - *Pre-cast concrete products - Formwork blocks of normal and lightweight concrete - Product properties and performance characteristics*

[3] **DIN EN 15498:2008-08** - *Pre-cast concrete products - Wood-chip formwork blocks - Product characteristics and performance characteristics*

[4] **DIN 18218:2010-01** – *Fresh concrete on perpendicular formwork*

[5] **DIN EN 1990:2010-12** – *Eurocode: Bases of structural design; German version EN 1990:2002*

[6] **DIN EN 1990/NA:2010-12** – *National Annex - Nationally determined parameters – Eurocode: Bases of structural design*

[7] **DIN EN 1992-1-1:2011-01** - *Eurocode 2: Design of concrete structures - Part 1-1: General rules and rules for buildings; German version EN 1992-1-1:2004 + AC:2010*
DIN EN 1992-1-1/A1:2015-03

[8] **DIN EN 1992-1-1/NA National Annex: 2013-04** - *National Annex - Nationally determined parameters - Eurocode 2: Design of concrete structures - Part 1-1: General design rules and rules for buildings*
DIN EN 1992-1-1/NA/A1:2015-12

[9] **DIN 4103-1:2015-06** - *Non-load-bearing internal dividing walls – Part 1: Requirements and testing*

[10] **DIN EN 206-1:2001-07** – *Concrete – Part 1: Specification, performance, production and conformity; German version EN 206-1:2000*
DIN EN 206-1/A1:2004-10 Amendment A 1
DIN EN 206-1/A2:2005-09 Amendment A 2

[11] **DIN 1045-2:2008-08** – *Concrete, reinforced concrete and pre-stressed concrete structures - Part 2: Concrete - Specification, properties, production and conformity - Application rules for DIN EN 206-1*

[12] **DBV explanatory leaflet "Concreting capability of concrete and reinforced concrete components"** - *01/2014*

[13] **DIN 18202:2013-04** - *Tolerances in building construction – Structures*

[14] **DIN EN 1992-1-2:2010-12** *Design and construction of reinforced concrete and pre-stressed concrete supporting structures -*
Part 1-2: General rules – Structural fire design;
German version EN 1992-1-2:2004 + AC008

[15] **DIN EN 1992-1-2/NA:2010-12** – *National Annex - Nationally determined parameters – Eurocode 2: Design and construction of reinforced concrete and pre-stressed concrete supporting structures Part 1-2: General rules – Structural fire design*

[16] **DIN EN 13163:2015-04** - *Thermal insulation materials for buildings - Factory-made expanded perlite (EP) and expanded vermiculite (EV) - Specification; German version EN 13163:2008*

[17] **DIN EN 13501-1:2010-01** *Fire classification of construction products and building elements – Part 1: Classification using data from reaction to fire tests; German version EN 13501-1:2007+A1:2009*

[18] **DIN 4109-1:2016-07** - *Sound insulation in structural engineering – Part 1: Minimum requirements*

[19] **DIN 4109-2:2016-07** - *Sound insulation in structural engineering – Part 2: Mathematical proof of compliance with the requirements*

[20] **DIN 4109-32:2016-07** - *Sound insulation in structural engineering – Part 32: Data for mathematical proof of sound insulation (component catalogue) – Solid construction*

[21] **DIN 4108-4:2013-02** - *Thermal insulation and energy saving in buildings – Part 4: Thermal and moisture protection coefficients*

Entwurf

Appendix 1

Demonstrating resistance to horizontal effects (H_{Ed}) at wall level for lattice-type and column-type walls, excluding the effects of earthquakes.

Design resistance is determined by choosing a relevant model (see (a), (b) or (c) below and the concrete used (normal or lightweight concrete). DIN EN 1992-1 1 [8] in conjunction with DIN EN 1992-1-1/NA [9] must be taken into account when determining the relevant effects.

Partial safety coefficients for "extraordinary design situations" must be chosen in line with those for "constant and temporary design situations".

Three static models as per Fig. 1 may be applied:

- a) Framework model (unreinforced concrete)
- b) Model with continuous struts (unreinforced concrete)
- c) Beam model (reinforced concrete)

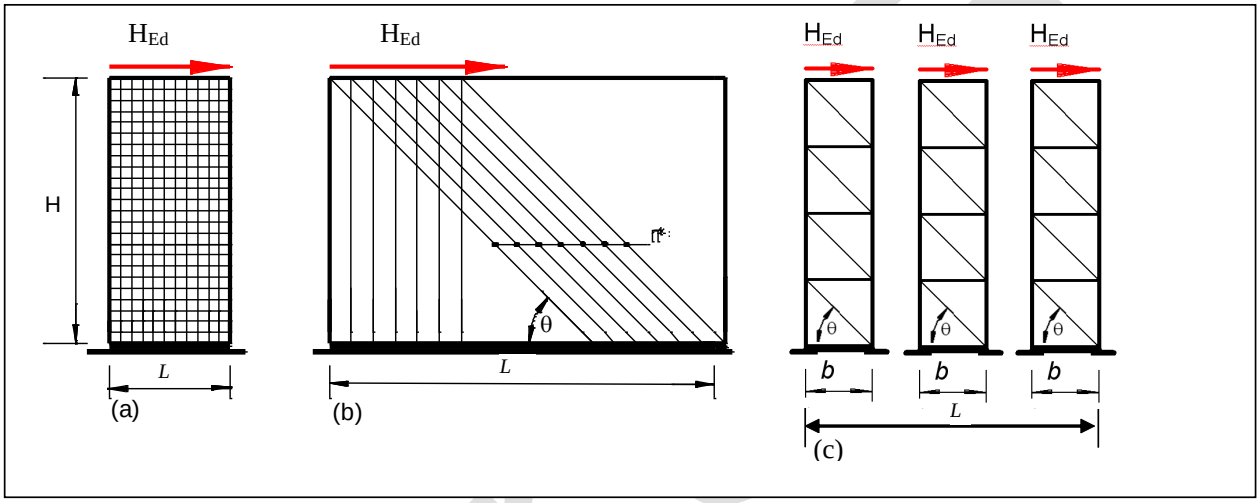

a) Framework model b) Model with continuous struts c) Beam model

Figure 1: Static models for horizontal shear forces H_{Ed}

Evidence of horizontal shear force along the wall (shear forces) H_{Ed} must be provided as follows:

$H_{\mathrm{Ed}} \leq H_{\mathrm{Rd,i}}$ where I = 1 to 3 *(design resistance of individual models)*

Under the combined effect of horizontal and vertical loads the concrete supports must remain as isI, i.e. no tensile stress should occur, otherwise the planners must order vertical reinforcement in the supports to cover the tensile strength.

Evidence $H_{\mathrm{Ed}} \leq H_{\mathrm{Rd,i}}$ of the static models suggested may be provided using the following approaches:

A. Framework model

The design resistance $H_{\mathrm{Rd,1}}$ of the framework model depends on the tensile strength of the concrete bar. Assuming parabolic shear flow distribution along the length of the wall *L* under the beam theory and zero-point moment in the middle of the concrete bar, the load-bearing capacity of a concrete bar is reached if the tensile strength exceeds the tensile strength of the concrete due to maximum bending moment at the bar/support intersection. The maximum shear stress value H'_{Ed} is derived using equation (1):

$$\max H'_{\mathrm{Ed}} = \frac{3}{2}\frac{H_{\mathrm{Ed}}}{L} \quad , \tag{1}$$

thus giving a maximum shearing force $\max V_{\mathrm{Ed,r}}$ in a concrete bar or

$$\max V_{\mathrm{Ed,r}} = \max H'_{\mathrm{Ed}} h_{\mathrm{s}} = \frac{3}{2}\frac{H_{\mathrm{Ed}}}{L} h_{\mathrm{s}} \tag{2}$$

The maximum related bending moment $\max M_{\mathrm{Ed,r}}$ in a concrete bar is

$$\max M_{\mathrm{Ed,r}} = \max V_{\mathrm{Ed,r}} \frac{l_r}{2} = \frac{3}{4}\frac{H_{\mathrm{Ed}}}{L} h_{\mathrm{s}}\, l_r \tag{3}$$

With a given resistance moment Z_{r} for the concrete bar and a characteristic concrete tensile strength $f_{\mathrm{ctk;0,05}}$ this gives the following design resistance for a wall:

$$H_{\mathrm{Rd,1}} = \frac{4}{3}\frac{L}{h_{\mathrm{s}}}\frac{Z_{\mathrm{r}}}{l_{\mathrm{r}}}\frac{f_{\mathrm{ctk;0,05}}}{\gamma_{\mathrm{ct}}} \tag{4}$$

In equation (4) the following designations apply (see Figure. 2):

$H_{\mathrm{Rd,1}}$		Design shear strength as per framework model;
L		Wall length;
h_{s}		Distance between concrete bar centres;
l_{r}		clear length of concrete bar;
Z_{r}		resistance moment of concrete bar;
$f_{\mathrm{ctk;0,05}}$		characteristic axial tensile strength of concrete; $f_{\mathrm{ctk;0,05}} = \eta_1 \cdot 0{,}7 \cdot 0{,}3 \cdot f_{\mathrm{ck}}^{2/3} = \eta_1 \cdot 0{,}21 \cdot f_{\mathrm{ck}}^{2/3}$ [MN/m²];
f_{ck}		characteristic compressive strength of concrete (cylinder);
γ_{ct}	where $1{,}5$	partial safety factor for tensile strength of in-situ concrete;
η_1	where $1{,}0$	for normal in-situ concrete;
	$0{,}40 + 0{,}60 \cdot \rho / 2200$	for in-situ lightweight concrete with a calculated dry bulk density value of ρ in [kg/m³].

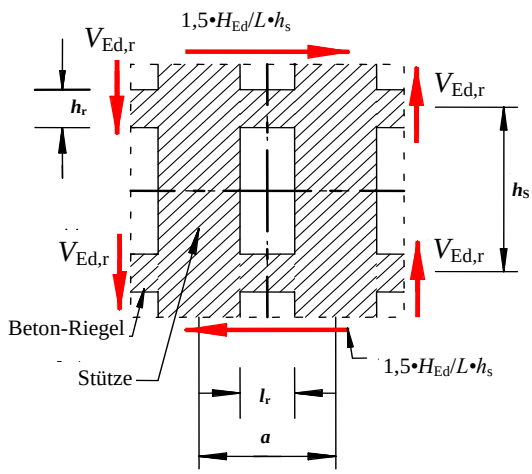

Beton-Riegel	Concrete bar
Stütze	Support

Figure 2: Designations

B. Model with continuous struts

The design resistance $H_{\mathrm{Rd,2}}$ of the model with continuous struts depends on the strength *n* of struts running continuously through the wall from one storey to the next (see Fig. 1 and 3).

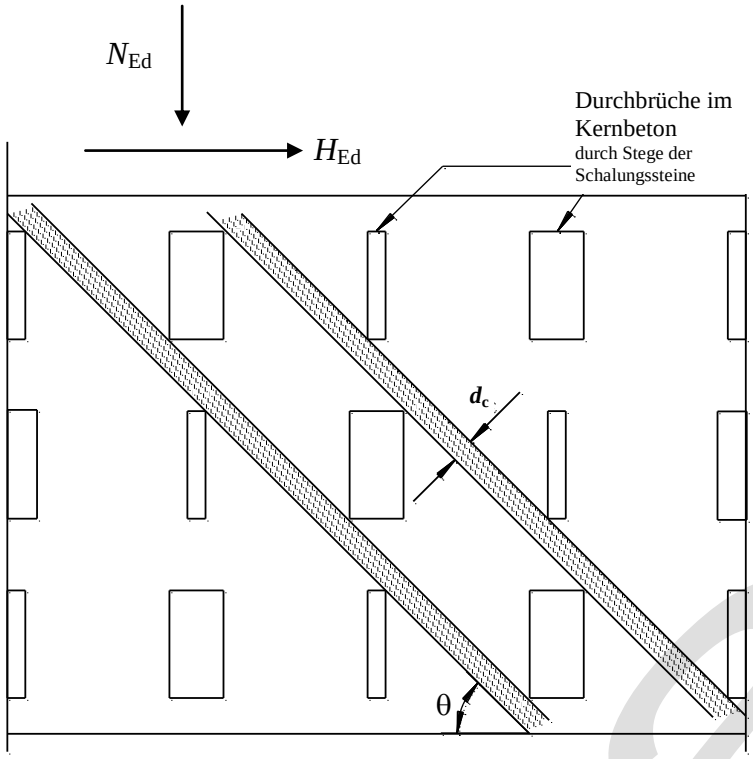

Durchbrüche im Kernbeton durch Stege der Schalungssteine	Recesses in core concrete using formwork block studs

Figure 3: Height d_c of a continuous strut

The design resistance of a strut is determined using equation (5). The angle of inclination θ for the struts is derived from Fig. 3.

The design resistance $H_{\mathrm{Rd,2}}$ is derived from equation (5):

$$H_{\mathrm{Rd,2}} = n^* \cdot \nu \cdot f_{\mathrm{cd}} \cdot b_{\mathrm{c}} \cdot d_{\mathrm{c}} \cdot \cos\theta \leq N_{\mathrm{Ed}} \cdot \cot\theta \qquad (5)$$

where

$H_{\mathrm{Rd,2}}$	=	Design resistance as per model with continuous struts;
n^*	=	Number of continuous struts in a wall;
f_{cd}	=	Design value of concrete compressive strength;
ν	=	$0{,}6\left(1 - f_{\mathrm{ck}}[\mathrm{MN/m^2}/250]\right)$ *(corresponds to equation 6.6N in [8] or [9]);*
b_{c}	=	Strut thickness;
d_{c}	=	Strut height (at least 70 mm);
θ	=	Angle of inclination of strut 30°≥ θ ≥ 60°;
N_{Ed}	=	Design value of standard force.

C. Beam model

Design resistance $H_{\mathrm{Rd,3}}$ under the beam model can be determined using same design rules as for reinforced concrete beams. The concrete diagonal strut does not run over the entire storey but within the concrete support. The concrete diagonal strut is re-suspended using the reinforcement. This "re-suspended reinforcement" is formed using horizontal reinforcing steel bars running within the concrete bar of the support/bar system. Sufficient end anchorage of the horizontal bars – e.g. by overlapping the reinforcement – must be ensured as per DIN EN 1992-1-1 [8] in conjunction with DIN EN 1992-1-1/NA [9], Section 8.

Draft

The design resistance $H_{\mathrm{Rd,3a}}$ of re-suspended reinforcement is derived from equation (6):

$$H_{\mathrm{Rd,3a}} = \min(A_{\mathrm{sh,r}} \cdot f_{\mathrm{yd}}; A_{\mathrm{sv,r}} \cdot f_{\mathrm{yd}} \cdot \frac{H}{b}) \tag{6}$$

where

$H_{\mathrm{Rd,3a}}$	=	Design resistance of re-suspended reinforcement as per beam model;
$A_{\mathrm{sh,r}}$	=	Cross section of horizontal re-suspended reinforcement;
$A_{\mathrm{sv,r}}$	=	Cross section of vertical concrete bar reinforcement;
b	=	Width of concrete support
f_{yd}	=	Design value of steel resistance of re-suspended reinforcement.

Design resistance $H_{\mathrm{Rd,3b}}$ of the diagonal strut is derived in the same way as with equation (5)

$$H_{\mathrm{Rd,3b}} = n^* \cdot \nu \cdot f_{\mathrm{cd}} \cdot b_{\mathrm{c}} \cdot d_{\mathrm{c}} \cdot \cos\theta \tag{7}$$

where

n^*	=	1;
θ	=	Angle of inclination of strut 30°≥ θ ≥ 60°.

The design resistance $H_{\mathrm{Rd,3}}$ of the beam model as per Fig. 1c) is derived using equation (8)

$$H_{\mathrm{Rd,3}} = \min(H_{\mathrm{Rd,3a}}; H_{\mathrm{Rd,3b}}) \tag{8}$$

Draft

Directive on roller shutters - RokR -

– July 2016 Version –

1 Scope

This directive applies to factory-made roller shutter cases (including roller shutter covers), which comply with the heat and sound insulation requirements.

The components of the roller shutter cases must consist of at least normally flammable materials.

For factory-made roller shutter cases with a static support function in the structure, the technical regulations laid down in Section C 2 must also be observed for the relevant construction product.

2 Thermal insulation

2.1 Requirements for minimum heat insulation

Requirements have been laid down for the heat transmission limit and for the surface temperature.

The roller shutter cases must meet the requirements of the minimum heat insulation in accordance with DIN 4108-2:2013-02, Section 5.1.3.

The requirement is considered fulfilled if, in accordance with Sections 2.2 or 2.3, the calculated or measured heat transfer coefficient U_{sb} of the roller shutter cases' $U_{sb} \geq 0.85$ W/(m² · K) and the calculated temperature factor calculated as per Section 2.2 $f_{Rsi} \leq 0.70$.

2.2 Calculation of the heat transmission coefficient U_{sb} and the temperature factor f_{Rsi}

The heat transmission coefficient U_{sb} of the roller shutter cases shall be calculated two-dimensionally in accordance with DIN EN ISO 10077-2:2012-06 and rounded to two digits. The calculation is to be carried out with a blind frame with a 60 mm constructional depth, which for the purposes of this Directive is to be regarded as adiabatic. The fixed frame shall be set together with the outer side of the actual or planned window area, irrespective of its width.

During the two-dimensional calculation, the heat flux density shall be obtained from the relevant height b_{sb} in accordance with DIN EN ISO 10077-2:2012-06.

The temperature factor f_{Rsi} of the roller shutters shall be calculated two-dimensionally in accordance with DIN EN ISO 10211:2008-04 in conjunction with DIN EN ISO 10077-2:2012-06 and rounded to two digits. The calculation shall be conducted with a blind frame with a 70-mm sash of wood with a thermal conductivity of λ = .13 W/(m · K) under the conditions of DIN 4108-2:2013-02. For the contact resistances, the conditions shall be set in accordance with Addendum 2 to DIN 4108:2006-03. The upper façade shall be considered as adiabatic for the purposes of this Directive.

For the components of the roller shutter cases, the respective rated thermal conductivity values are to be set λ in accordance with DIN EN ISO 10456:2010-05, DIN EN ISO 10077-2:2012-06, or DIN 4108-4:2013-02. For polyurethane foam insulated layers, the rated λthermal conductivity value is set at λ = 0.035 W/(m · K). The equivalent thermal conductivity of the roller area shall be set in accordance with DIN EN ISO 10077-2:2012-06. Suitable seals, e.g. brush seals, may be applied to reduce the size of the aperture.

2.3 Measurement of the heat transmission coefficient U_{sb}

The heat transmission coefficient U_{sb} of the roller shutters shall be determined in accordance with DIN EN 12412-4:2003-11.

3 Sound insulation

Where sound insulation characteristics are shown for the roller shutters, the associated calculated value for the rated sound insulation value shall be determined either

- based on its constructive characteristics in accordance with DIN 4109-35:2016-07, Table 6, or
- by measurement in accordance with DIN EN ISO 10140-1:2012-05, DIN EN ISO 10140-2, -4 and -5:2010-12 and evaluation in accordance with DIN EN ISO 717-1:2013-06 and DIN 4109-2:2016-07, Section 4.4.2.

Test reports in accordance with DIN EN 20140-3:1995-05 and DIN EN ISO 140-3:2005-03 in conjunction with DIN EN ISO 717-1:1997-01, or DIN EN ISO 717-1:2006-11 or DIN EN ISO 717-1:2013-06, that are created before the entry into force of this edition of the administrative provision in the Building Regulations may continue to be used.

4 Main features for the U mark

In the conformity mark of a roller shutter case which complies with the requirements of Sections 1 and 2, the heat transfer coefficient U_{sb} is to be indicated as an essential feature in roller shutter cases with sound insulation properties in accordance with Section 3, in addition to the evaluated noise insulation measurement "R_W = ...".

The main features of the conformity mark also include the information for combining roller shutter cases with roller shutter case covers.

For roller shutter cases with a static support function in the structure, the regulations for marking in accordance with the relevant technical rule must also be observed.

Draft

Technical Rule on provisions for the manufacture of heat-soaked thermally toughened soda-lime safety glass (ESG-H)

– June 2016 Version –

New research findings show that at temperatures over 290°C can lead to reconversion processes and hence to renewed increases in failure probability due to nickel sulfide inclusions. Therefore, the temperatures in Section 2.1 have been reduced compared to earlier regulations.
The new temperature regulation applies from the date on which the new version of EN 14179-2 is announced in the Official Journal of the European Union. Prior to this, the temperature regulations of Building Regulation List A Part 1, Annex 11.11 (2015/2) apply.

1 Properties and composition

Heat-soaked thermally toughened soda-lime safety glass must be made from thermally toughened soda-lime safety glass (ESG) as per DIN EN 12150-2 made from float glass as per DIN EN 572-9. Soda-lime safety glass (ESG) may also be enamelled or coated as per DIN EN 1096-4. Under DIN EN 12150-1, the edges must be seamed (KGS), precision-ground (KGM), sanded (KGN) or polished (KPO). Each pane must be subjected to heat soaking as per Section 2.1.
After heat soaking, the requirements under DIN EN 12150-1:2015-12, Table 11 apply to bending strength and the requirements under DIN EN 12150-1:2015-12, Table 10 apply to the break structure for all pane dimensions.

2 Manufacture, packaging, transportation and marking

2.1 Manufacture

The ESG panes must be manufactured as per Section 1 and subjected to heat soaking after cooling to room temperature. The distance between ESG panes must be at least as large as the distance maintained during initial type testing of the construction product. A value of at least 20 mm is recommended. In the heat-up phase the glass mass must be heated up at the heat-up rate laid down in initial type testing, with a maximum temperature of 290 °C not being exceeded in any part of the entire glass mass. The heat-up phase is deemed completed as soon as the entire glass mass reaches a temperature of at least 250 °C. A hold time of at least four hours is then implemented to ensure that the temperature of all glass masses in the furnace does not exceed the 250 °C–290 °C range, even temporarily. During the hold time, the target glass temperature should be 260 °C ± 10 °C. If there is a deviation in the above temperature range or the hold time is not reached, the batch may be subjected to at most one further heat soaking. Batches that exceed the upper temperature limit of 290 °C must be discarded. The manufacturing conditions laid down during initial type testing as per Section 3.3 must be adhered to. The panes must be tested after heat soaking for visible damage to the glass edges.

2.2 Packaging, transportation and storage

The glass elements may only be transported with suitable transport aids that exclude damage to the glass edges. In the case of intermediate storage, appropriate pads must be used to protect the glass edges.

2.3 Marking

The ESG-H panes must match the properties listed in Section 1 and the manufacturing conditions under Section 2.1 and must be marked by the manufacturer with the conformity mark (Ü-mark) as per state conformity regulations. The abbreviated designation for the construction product is "ESG-H as per MVV TB Appendix 11.1".

The ESG-H panes must be permanently and visibly marked with the following information – where applicable using comprehensible abbreviations:

- Manufacturer, manufacturing plant where applicable
- ESG-H
- Certification body

Marking must only be made if the preconditions of Section 3 are met.

The manufacturer must be named (footnote: the manufacturer of an ESG-H pane is the firm that carries out the heat soaking). If the manufacturer's name does not allow for the clear allocation of the ESG-H pane to the manufacturing plant, manufacturing plant information is also required. Instead of the manufacturer's name, the distributor of the construction product may also be given along with manufacturing plant information. The manufacturing plant information must be provided in encrypted form if the manufacturing plant can be clearly determined at all times by the manufacturer or distributor and by the certification body and monitoring body.

3 Certificate of conformity

3.1 General

Confirmation that ESG-H under Section 1 complies with the provisions of this Appendix should be issued for every manufacturing plant in the form of a certificate of conformity based on in-house quality control and regular external monitoring, including an initial test of the construction product in accordance with the following provisions. For the issuing of a certificate of conformity and external monitoring including product tests, the ESG-H manufacturer must call on a recognised certification body and recognised monitoring body.

Draft

The highest competent planning authority must be provided on request with a copy of the certificate of conformity issued by it and with a copy or the initial type testing report.

3.2 In-house production control

3.2.1 General

In each plant manufacturing ESG-H panes, in-house production control must be set up and carried out for each furnace. In-house quality control is understood to be continuous monitoring of production which should be undertaken by the manufacturer to ensure that the construction products manufactured by it satisfy the provisions of this Appendix.

To ensure continuous operation, the personnel who carry out the following regulated work must be named. In-house production control must include at least the measures specified in Sections 3.2.2 and 3.2.3.

3.2.2 Inspections and tests to be carried out when conducting heat soaking for ESG-H panes:

The data for all control elements laid down during initial type testing for reliable furnace temperature regulation, the description of furnace loading and glass breakage rate must be documented in consultation with the external monitoring body.

Compliance with the manufacturing conditions laid down in Section 2.1 must be checked. Where deviations are detected, the panes may not be marked as ESG-H panes and may not be used as such.

All panes must be tested after heat soaking for damage to the edges. Panes with edge damage at a depth of more than 5 % of glass thickness may not be used as ESG-H panes.

Testing of bending tensile strength must be carried out during the production process in consultation with the external monitoring body so that faulty batches can be detected in good time. At least 5 samples per nominal glass thickness manufactured per year must be tested as per DIN EN 1288-3 (four edge procedure). When manufacturing ESG-H from glass with strength-reducing coatings, at least 5 samples must also be tested per year and per manufactured nominal glass thickness.

3.2.3 Documentation

The results of the in-house quality control should be recorded and evaluated. The records must contain at least the following information:

- description of construction product or starting materials and constituents
- type of control or test
- date of manufacturing and testing of the construction product or starting materials or constituents
- result of controls and tests and comparison with the requirements where applicable
- address of installation site. Where this is not known, the pane buyer must be logged.
- signature of the person responsible for in-house quality control.

The records should be kept for at least 5 years. They must be submitted to the highest competent building inspectorate authority on request.

If the test result is unsatisfactory, the manufacturer should immediately take the necessary measures to resolve the defect. Construction products which do not comply with the requirements should be handled in such a manner that confusion with compliant products is impossible. After removal of the defect, the relevant test should be repeated immediately, where technically practicable and necessary to demonstrate that the defect has been removed.

3.3 External monitoring of ESG-H panes

Initial type testing of ESG-H panes must be carried out as part of external monitoring. Initial type testing includes calibrating the furnace system and product testing. Each furnace system must be calibrated. The temperature specifications under Section 2.1 must be adhered to for all relevant loading conditions for the entire glass mass. For this proof, the monitoring body must record at least one test run at maximum load – recording the temperature of the glass surface at critical furnace loading points. All key furnace data (temperature-time diagram for circulating air, location of temperature sensors required for operating the furnace, etc.) and the description of loading conditions (e.g. number of panes, minimum distance between panes, position of glass racks) must be documented as guidelines for subsequent operation of the heat soak furnace. If key production conditions are changed (e.g. when converting or repairing the tested plant), the manufacturer is required to inform the external monitoring body, which will decide whether to repeat the initial type testing.

Each furnace must be recalibrated every 2 years. The scope of the test will be determined by the external monitoring body and can involve measuring a loading condition under typical production conditions. This two-yearly test can be dispensed with if the manufacturer has appropriate measuring tools and carries out its own measurements according to the specifications of the external monitoring body. In this case, the external monitoring body determines the monitoring cycle for this test.

During initial type testing, the value of characteristic bending tensile strength and break structure as per DIN EN 12150-1 must be determined for each nominal thickness. In-house production control must be checked via external monitoring at least once a year, and at least twice a year during the first two manufacturing years.

The results of certification and external monitoring should be kept for at least 5 years. They should be presented by the certification body or monitoring entity to the German Institute for Building Technology and the authorised top-level building authority when required.

Draft